STATE OF ILLINOIS
DEPARTMENT OF TRANSPORTATION

F.A.P. RTE.	SECTION	COUNTY	TOTAL SHEETS	SHEET NO.
721	(115BR-1)BR	PIATT	32	16
FED. ROAD DIST. NO.	ILLINOIS	FED. AID PROJECT		

CONTRACT NO. 70433

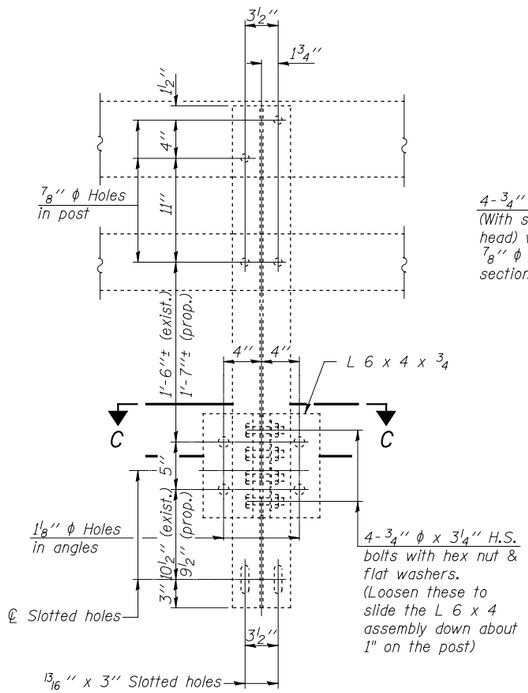

SECTION B-B

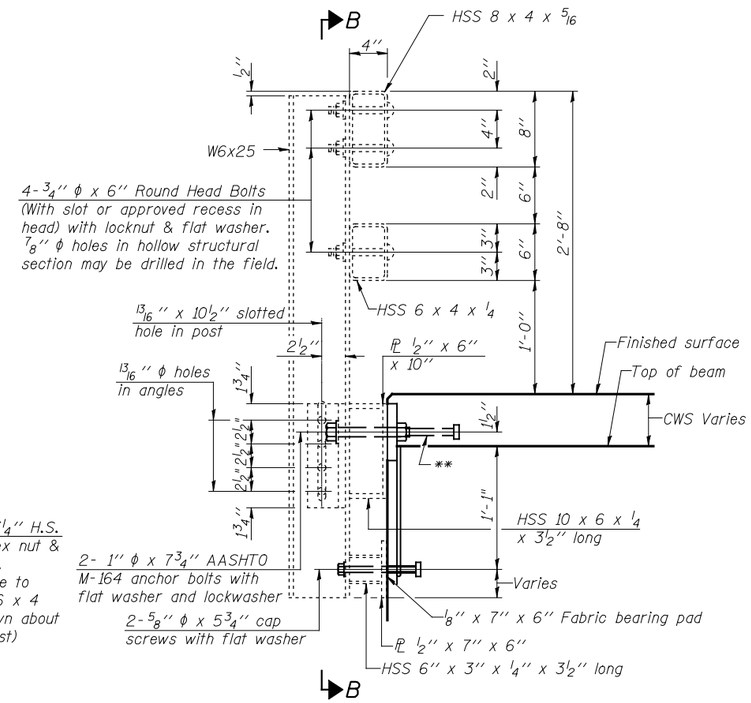

SECTION AT RAIL POST

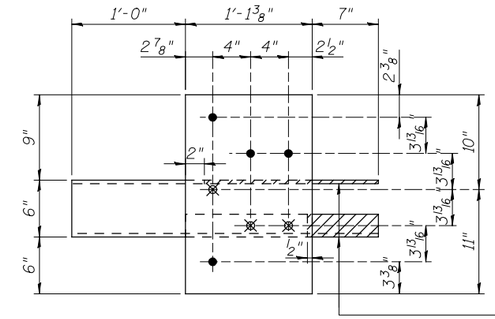

Hatched portions of ⅜" Plate and L 4 x 4 x ⅜ shall be removed or omitted. If removed after galvanizing, the exposed bare metal shall be coated with an approved zinc rich paint.

GUARDRAIL CONNECTION PLATE ASSEMBLY

(Modified from Std. 631032)

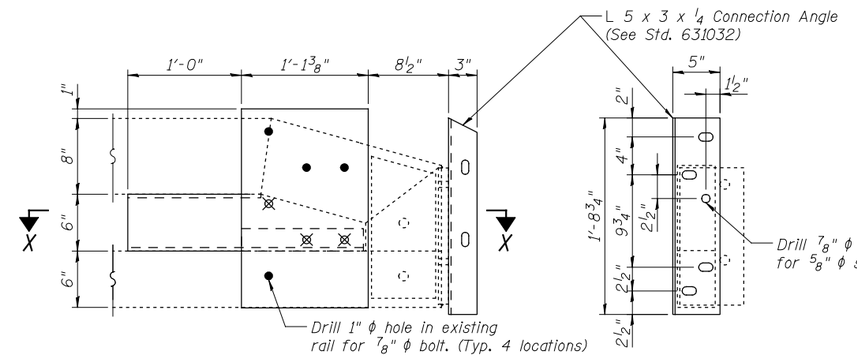

END OF RAIL DETAILS

(Typical at 3 corners of bridge)

END VIEW

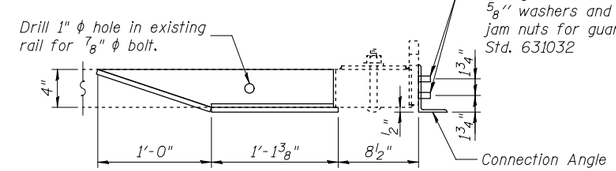

SECTION X-X

Notes:

Existing railing assembly shall be removed and reinstalled.

All field drilled holes shall be coated with an approved zinc rich paint before erection.

For multi-span bridges, sufficient ¼" x 6" x 1'-2" galvanized steel shims shall be provided to align rail between adjacent spans. Cost included with Remove and Re-erect Existing Bridge Rail.

Steel rail elements shall be galvanized according to Article 509.05 of the Standard Specifications.

**The studs of the anchor devices shall be placed below the top reinforcement bars and the outermost longitudinal reinforcement bar shall be placed directly above the studs of the rail post anchor device.

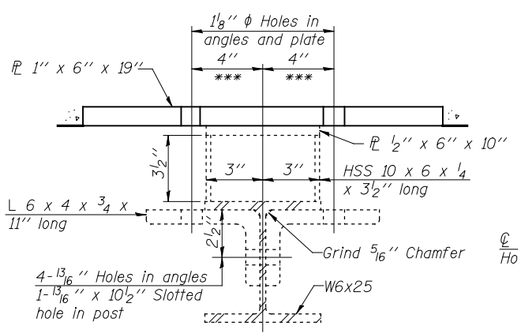

SECTION C-C

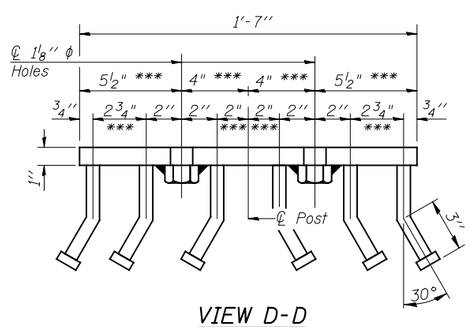

VIEW D-D

***Indicates dimensions are modified from "standard" to fit existing post assembly.

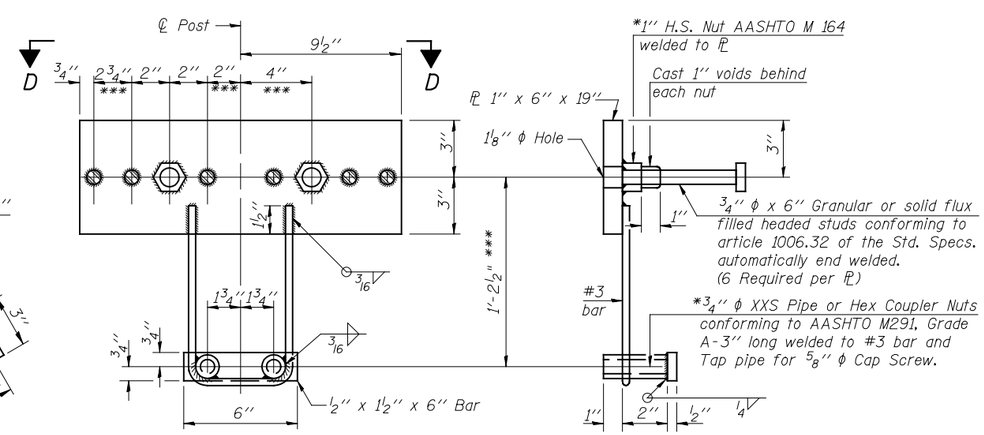

ANCHOR DEVICE

*Threaded areas shall be plugged or blocked off during casting of beam. Galvanized after fabrication.

BILL OF MATERIAL

Item	Unit	Quantity
Remove and Re-erect Existing Bridge Rail	Foot	299

STEEL RAILING, TYPE SM
WITH CONCRETE WEARING SURFACE

ILLINOIS 10 OVER
MADDEN CREEK
FAP ROUTE 721 SECTION (115BR-1)BR
PIATT COUNTY
STATION 1210+89.58
STRUCTURE NO. 074-0005

Johnson, Depp & Quisenberry
CONSULTING ENGINEERS
Springfield, Illinois

DESIGNED:	JDQ	DRAWN:	SJS
CHECKED:	DCD	CHECKED:	DCD

(6'-3" Maximum Post Spacing) (5" minimum to 7⅛" maximum CWS thickness)

DATE: 06/13/2008 19:38:37 USER: $(USER) FILE: J:\JDQ\10149 IL-D5VV#4 IL 10 Madden Creek\I-MaddenCreek\05steelrail.dgn