F.A. RTE.	SECTION	COUNTY	TOTAL SHEETS	SHEET NO.
FAP734	98-00480-00-BR 03-00522-00-TL	WINNEBAGO	62	60
STA. _____ TO STA. _____				
FED. ROAD DIST. NO. _	ILLINOIS	FED. AID PROJECT		

VALVE MANHOLE INSTALLATION

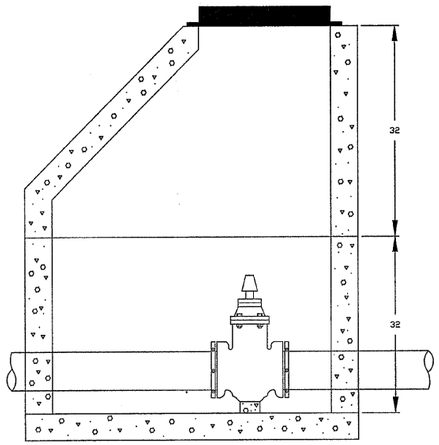

DOGHOUSE BLOCKING

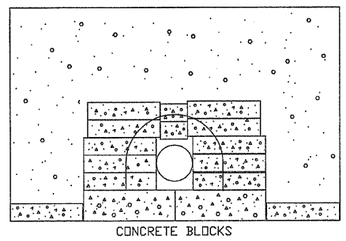

WDTL-VV

VALVE & VAULT DETAIL

NOT TO SCALE

ROCKFORD WATER DEPARTMENT

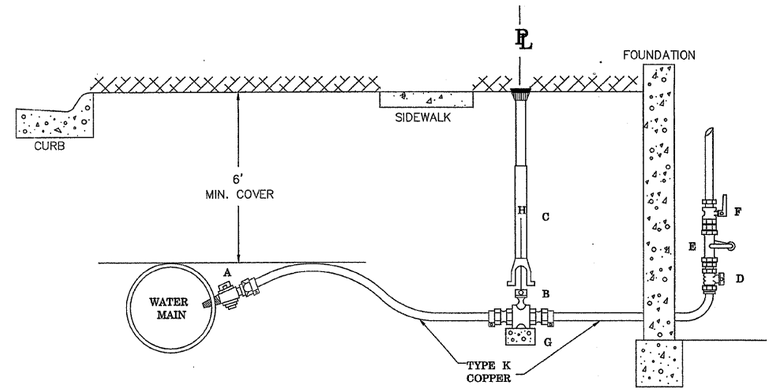

ITEM	DESCRIPTION	SIZE
A	CORPORATION STOP	3/4"-2"
B	CURB STOP	3/4"-2"
C	CURB BOX	EXTENDABLE
D	METER STOP	3/4"-2"
E	METER SPREAD	5/8"-2"
F	METER STOP HOUSE SIDE	5/8"-2"
G	BRICK	CEMENT
H	ROD	36"

WDTL-WSER

WATER SERVICE DETAIL

NOT TO SCALE

CONCRETE STEPS

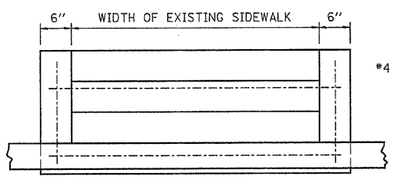

*4 BARS AS SHOWN

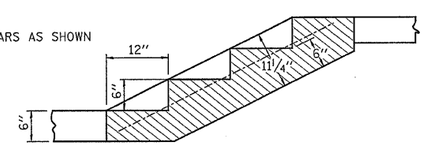

CONFIGURATION SHOWN IS 4 STEPS

CONCRETE QUANTITY (CU. YD.)

NO. OF STEPS	2' WIDE	3' WIDE	4' WIDE	5' WIDE
1	0.17	0.22	0.27	0.32
2	0.28	0.36	0.44	0.53
3	0.39	0.51	0.62	0.73
4	0.51	0.65	0.80	0.94
5	0.62	0.80	0.97	1.15
6	0.73	0.94	1.15	1.35
7	0.85	1.08	1.32	1.56
8	0.96	1.23	1.50	1.77
9	1.07	1.37	1.68	1.98
10	1.19	1.52	1.85	2.18

CONCRETE STEPS SHALL HAVE 6" RISERS AND 12" TREADS. CLASS SI CONCRETE SHALL BE USED THROUGHOUT. CONCRETE STEPS WILL BE PAID FOR AT THE CONTRACT UNIT PRICE PER CUBIC YARD FOR CLASS SI CONCRETE OR CONCRETE STEPS WHICH PRICE SHALL INCLUDE THE COST OF FURNISHING AND INSTALLING THE REINFORCEMENT BARS.

70 B

CONCRETE COLLARS FOR PIPE OR BOX CULVERT EXTENSIONS

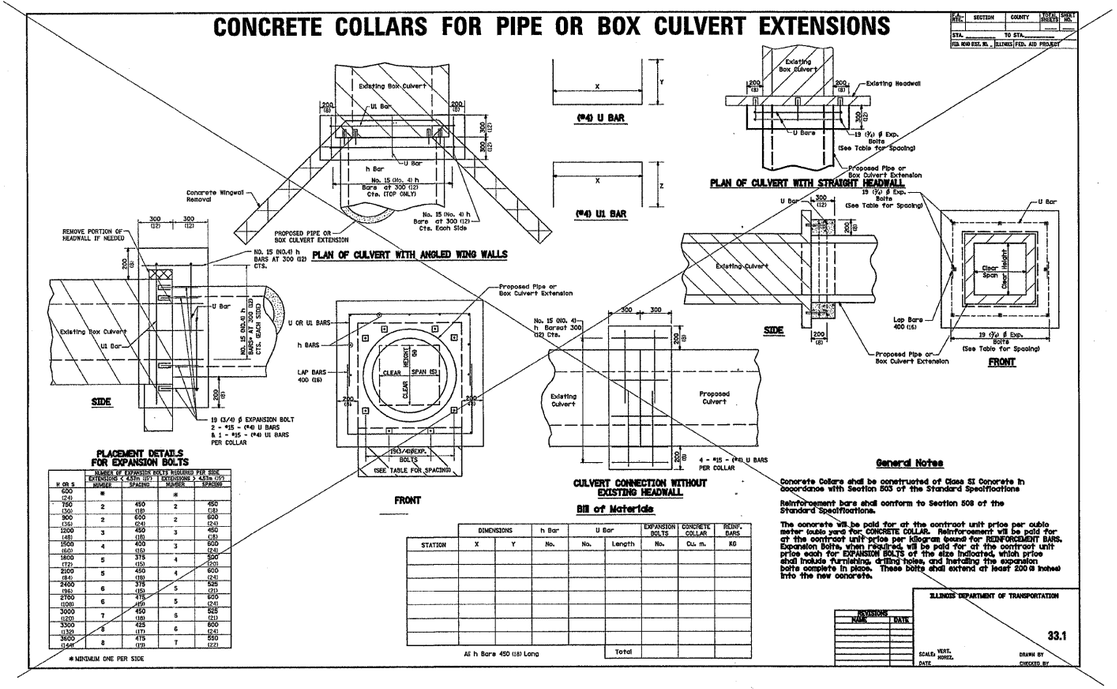

PLACEMENT DETAILS FOR EXPANSION BOLTS

Y OR S	NUMBER OF EXPANSION BOLTS REQUIRED PER SIDE: EXTENSIONS < 4.57m (15') NUMBER	SPACING	EXTENSIONS > 4.57m (15') NUMBER	SPACING
600 (24)	*		*	
750 (30)	2	450 (18)	2	450 (18)
900 (36)	2	450 (18)	2	600 (24)
1200 (48)	3	450 (18)	2	450 (18)
1500 (60)	4	450 (18)	3	600 (24)
1800 (72)	5	375 (15)	4	500 (20)
2100 (84)	5	450 (18)	4	600 (24)
2400 (96)	6	375 (15)	5	525 (21)
2700 (108)	6	450 (18)	5	675 (27)
3000 (120)	7	450 (18)	5	625 (25)
3300 (132)	8	425 (17)	6	600 (24)
3600 (144)	8	475 (19)	7	550 (22)

* MINIMUM ONE PER SIDE

Bill of Materials

STATION	DIMENSIONS X	DIMENSIONS Y	h Bar No.	U Bar No.	U Bar Length	EXPANSION BOLTS No.	CONCRETE COLLAR Cu. m.	REINF. BARS KG
					Total			

All h Bars 450 (18) Long

General Notes

Concrete Collars shall be constructed of Class SI Concrete in accordance with Section 503 of the Standard Specifications.

Reinforcement bars shall conform to Section 508 of the Standard Specifications.

The concrete will be paid for at the contract unit price per cubic meter (cubic yard) for CONCRETE COLLAR. Reinforcement will be paid for at the contract unit price per kilogram (pound) for REINFORCEMENT BARS. Expansion Bolts, when required, will be paid for at the contract unit price each for EXPANSION BOLTS of the size indicated, which price shall include furnishing, drilling holes, and installing the expansion bolts complete in place. These bolts shall extend at least 200 (8 inches) into the new concrete.

REVISIONS NAME	DATE

ILLINOIS DEPARTMENT OF TRANSPORTATION

33.1

SCALE: NONE. MODEL. DATE

DRAWN BY CHECKED BY