CONTRACT NO. 94533

F.A.P. RTE.	SECTION	COUNTY	TOTAL SHEETS	SHEET NO.
781	1YRS, 2ZRS-1	CRAWFORD	378	174
STA.		TO STA.		
FED. ROAD DIST. NO.		ILLINOIS	FED. AID PROJECT	

DETAIL OF PRECAST CONCRETE BOX CULVERT M259M

AASHO DESIGNATION M259M
(ASTM DESIGNATION C-789M)
DESIGN LOADING = MS18

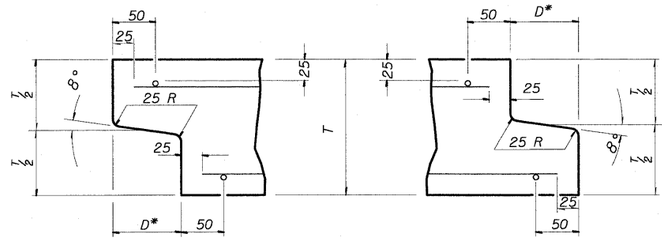

DETAIL A
(TYP. INLET END)

DETAIL B
(TYP. OUTLET END)

NOTE: INLET AND OUTLET ENDS SHALL BE COMPATIBLE.

* THE D DIMENSION SHALL CONFORM TO THE MANUFACTURER'S STANDARDS.

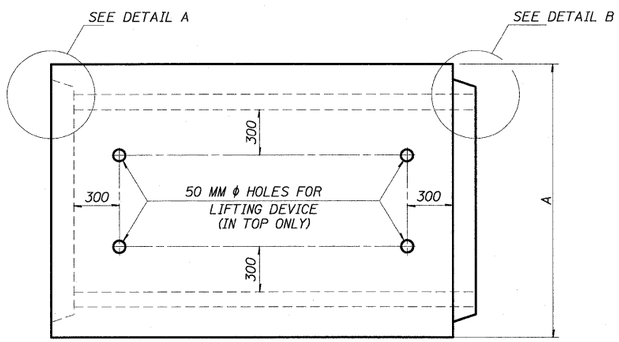

PLAN

LOCATION OF LIFTING HOLES MAY BE VARIED AS NEEDED TO CLEAR REINFORCEMENT.

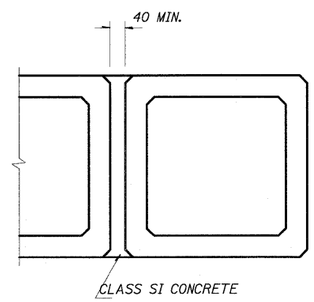

MULTIPLE UNIT PLACEMENT

GENERAL NOTES

SHOP PLANS FOR THE REINFORCEMENT SHALL BE SUBMITTED IN ACCORDANCE WITH THE REQUIREMENTS OF ARTICLE 504.04(a) OF THE STANDARD SPECIFICATIONS.

MINIMUM CONCRETE STRENGTH SHALL BE 35 MPa AFTER 28 DAYS.

THE JOINTS OF THE PRECAST BOX SECTIONS SHALL BE SEALED IN ACCORDANCE WITH ARTICLE 542.04(d) OF THE STANDARD SPECIFICATIONS FOR ROAD AND BRIDGE CONSTRUCTION.

THE TERMS A_{S1}, A_{S3}, AND A_{S4} DENOTE THE REQUIRED STEEL AREAS FOR REINFORCEMENT AS SPECIFIED IN ASSHTO M259M. REINFORCEMENT SHALL BE WELDED WIRE FABRIC CONFORMING TO ASSHTO M55M.

LIFTING HOLES SHALL BE FILLED WITH CONCRETE PLUGS AND MASTIC AFTER THE BOX SECTIONS ARE IN PLACE.

DRAINAGE OPENINGS SHALL BE PROVIDED IN ACCORDANCE WITH ARTICLE 503.12 OF THE STANDARD SPECIFICATIONS. LOCATION AND SPACING OF THE OPENINGS SHALL BE SHOWN ON THE SHOP DRAWINGS.

ALL DIMENSIONS ARE DETAILED IN MILLIMETERS UNLESS OTHERWISE NOTED.

CULVERT SIZE		DIMENSIONS			
NOMINAL	ACTUAL				
SPANxRISE (METER)	SPANxRISE (METER)	T (MILLIMETERS)	A (METER)	B (METER)	C (MILLIMETERS)
0.6x0.6	0.610x0.610	100	0.810	0.810	100
0.9x0.6	0.914x0.610	100	1.114	0.810	100
0.9x0.9	0.914x0.914	100	1.114	1.114	100
1.2x0.6	1.219x0.610	125	1.469	0.860	125
1.2x0.9	1.219x0.914	125	1.469	1.164	125
1.2x1.2	1.219x1.219	125	1.469	1.469	125
1.5x0.6	1.524x0.610	150	1.824	0.910	150
1.5x0.9	1.524x0.914	150	1.824	1.214	150
1.5x1.2	1.524x1.219	150	1.824	1.519	150
1.5x1.5	1.524x1.524	150	1.824	1.824	150
1.8x0.6	1.829x0.610	175	2.179	0.960	175
1.8x0.9	1.829x0.914	175	2.179	1.264	175
1.8x1.2	1.829x1.219	175	2.179	1.569	175
1.8x1.5	1.829x1.524	175	2.179	1.874	175
1.8x1.8	1.829x1.829	175	2.179	2.179	175
2.1x1.2	2.134x1.219	200	2.534	1.619	200
2.1x1.5	2.134x1.524	200	2.534	1.924	200
2.1x1.8	2.134x1.829	200	2.534	2.229	200
2.1x2.1	2.134x2.134	200	2.534	2.534	200
2.4x1.2	2.438x1.219	200	2.838	1.619	200
2.4x1.5	2.438x1.524	200	2.838	1.924	200
2.4x1.8	2.438x1.829	200	2.838	2.229	200
2.4x2.1	2.438x2.134	200	2.838	2.534	200
2.4x2.4	2.438x2.438	200	2.838	2.838	200
2.7x1.5	2.743x1.524	225	3.193	1.974	225
2.7x1.8	2.743x1.829	225	3.193	2.279	225
2.7x2.1	2.743x2.134	225	3.193	2.584	225
2.7x2.4	2.743x2.438	225	3.193	2.888	225
2.7x2.7	2.743x2.743	225	3.193	3.193	225
3.0x1.5	3.048x1.524	250	3.548	2.024	250
3.0x1.8	3.048x1.829	250	3.548	2.329	250
3.0x2.1	3.048x2.134	250	3.548	2.634	250
3.0x2.4	3.048x2.438	250	3.548	2.938	250
3.0x2.7	3.048x2.743	250	3.548	3.243	250
3.0x3.0	3.048x3.048	250	3.548	3.548	250
3.3x1.2	3.353x1.219	275	3.903	1.769	275
3.3x1.8	3.353x1.829	275	3.903	2.379	275
3.3x2.4	3.353x2.438	275	3.903	2.988	275
3.3x3.0	3.353x3.048	275	3.903	3.598	275
3.3x3.3	3.353x3.353	275	3.903	3.903	275
3.6x1.2	3.658x1.219	300	4.258	1.819	300
3.6x1.8	3.658x1.829	300	4.258	2.429	300
3.6x2.4	3.658x2.438	300	4.258	3.038	300
3.6x3.0	3.658x3.048	300	4.258	3.648	300
3.6x3.6	3.658x3.658	300	4.258	4.258	300

SECTION LENGTH

WHEN EXTENDING AN EXISTING BOX, PLACE THIS END AGAINST THE EXISTING HEADWALL.

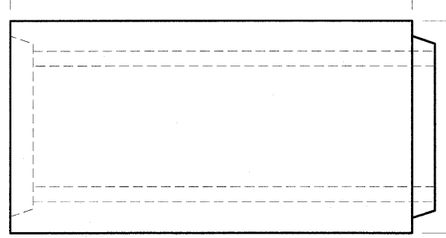

ELEVATION

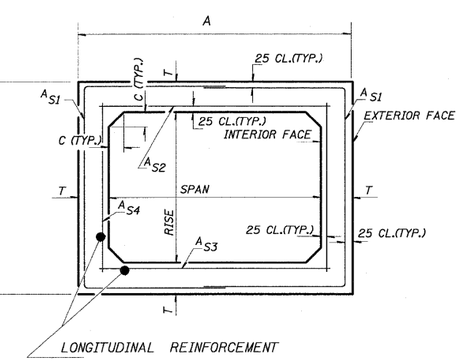

CROSS SECTION

REVISIONS	
NAME	DATE

ILLINOIS DEPARTMENT OF TRANSPORTATION

DETAIL OF PRECAST CONCRETE BOX CULVERT SECTION

SCALE NO SCALE DRAWN BY KOJ
DATE MARCH 20, 2008 CHECKED BY RGH

H. M. & G. NO. 4420

PLOT DATE = 3/20/2008
FILE NAME = H:\4420\78189_details.dgn