FAP ROUTE	SECTION	COUNTY	TOTAL SHEETS	SHEET NO
793 9392	05-00025-00-TL 07-00025-01-WR	MADISON	127	81
STA.	TO STA.			

CONTRACT NO. 97352

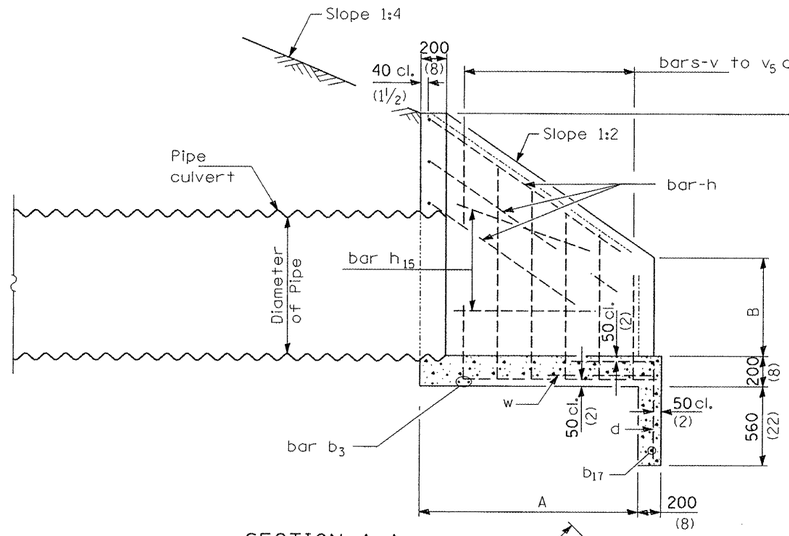

SECTION A-A

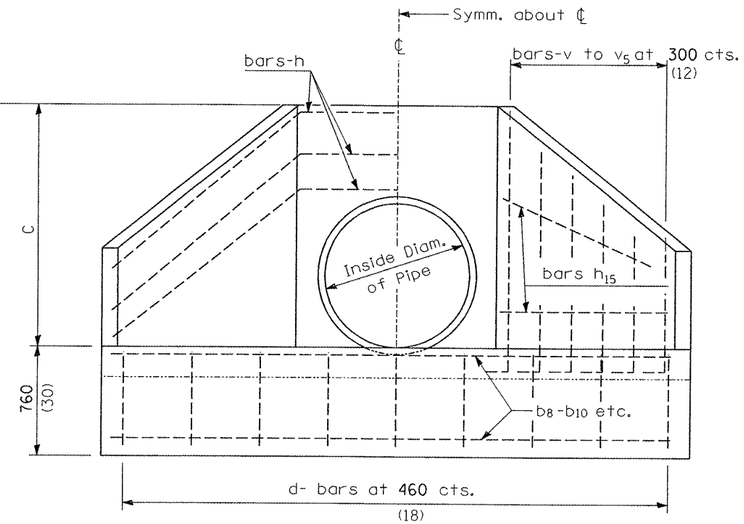

END ELEVATION

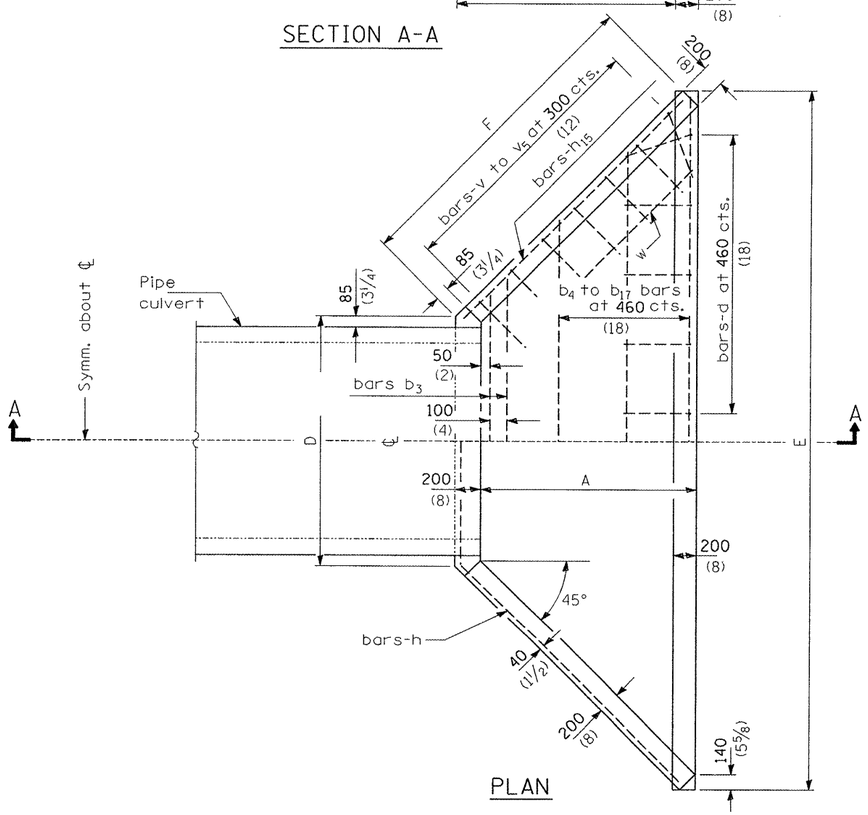

PLAN

GENERAL NOTES

*All slope ratios are expressed as units of vertical displacement to units of horizontal displacement (V:H).

All dimensions are in millimeters (inches) unless otherwise shown.

CAST-IN-PLACE REINFORCED CONCRETE END SECTION 36", SPECIAL
STA 119+48.92 42.00' RT
(SHEET 1 OF 2)

REVISIONS	
NAME	DATE

MISCELLANEOUS DETAILS

US 40 AND
TROY-O'FALLON ROAD IMPROVEMENTS
CITY OF TROY
MADISON COUNTY, ILLINOIS