GENERAL NOTES

1. Fasteners shall be ASTM A325 Type 1, mechanically galvanized bolts. Bolts $\frac{7}{8}$" diameter, holes $\frac{15}{16}$" diameter, unless otherwise noted.

2. Calculated weight of Structural Steel =
   M270 Grade 36: 33,320 lbs
   M270 Grade 50: 404,760 lbs

3. No field welding is permitted except as specified in the contract documents.

4. Reinforcement bars designated (E) shall be epoxy coated.

5. If the Contractor elects to use cantilever forming brackets on the exterior beams or girders, the brackets shall be placed at the same locations required for the hardwood blocks in Article 503.06(b) of the Standard Specifications. If additional cantilever forming brackets are required, hardwood blocking shall be wedged between the exterior and first interior beam at each of these additional bracket locations.

6. Bearing seat surfaces shall be constructed or adjusted to the designated elevations within a tolerance of $\frac{1}{8}$ in. (0.01 ft.). Adjustment shall be made by either grinding the surface or by shimming the bearings.

7. The existing structural steel contains lead. The Contractor shall take appropriate precautions to deal with the presence of lead on this project.

8. Plan dimensions and details relative to existing plans are subject to nominal construction variations. The Contractor shall field verify existing dimensions and details affecting new construction and make necessary approved adjustments prior to construction or ordering of materials. Such variations shall not be cause for additional compensation for a change in scope of work, however, the Contractor will be paid for the quantity actually furnished at the unit price bid for the work.

9. The Organic Zinc Rich Primer/Epoxy/Urethane Paint System shall be used for painting of new structural steel except where otherwise noted. The entire system shall be shop applied, with the exception of the exterior surface and the bottom of the bottom flange of fascia girders, masked off connections surfaces, and field installed fasteners and damaged areas shall be touched up and finish coated in the field. The color of the final finish coat for all interior steel surfaces shall be Gray, Munsell No. 5B 7/1. The color of the final finish coat for the exterior and bottom flange of the fascia girders shall be Reddish Brown, Munsell No. 2.5YR 3/4.

10. Stage I and Stage II shown in the plans correspond to Stage IA and Stage IB, respectively, shown in the Maintenance of Traffic Plans.

INDEX OF SHEETS

SA1	General Plan
SA2	General Notes, Index of Sheets and Total Bill of Material
SA3	Stage I Construction Details and Temporary Sheet Piling
SA4	Stage II Construction Details
SA5	Temporary Concrete Barrier for Stage Construction
SA6	Top of Slab Elevations (1 of 3)
SA7	Top of Slab Elevations (2 of 3)
SA8	Top of Slab Elevations (3 of 3)
SA9	Top of Slab Elevations (1 of 3)
SA10	Top of Slab Elevations (2 of 3)
SA11	Top of Slab Elevations (3 of 3)
SA12	Top of Approach Slab Elevations
SA13	Top of Approach Slab Elevations
SA14	Superstructure
SA15	Superstructure Details
SA16	Superstructure
SA17	Superstructure Details
SA18	Concrete Parapet Slipforming Option
SA19	Semi-Integral Abutment Diaphragm Details
SA20	Semi-Integral Abutment Diaphragm Details
SA21	Bridge Approach Slab Details (1 of 2)
SA22	Bridge Approach Slab Details (2 of 2)
SA23	Bridge Approach Slab Details (1 of 2)
SA24	Bridge Approach Slab Details (2 of 2)
SA25	Framing Plan
SA26	Structural Steel Details (1 of 2)
SA27	Structural Steel Details (2 of 2)
SA28	Elastomeric Bearing Details
SA29	North Abutment Concrete Removal and Repair Details
SA30	South Abutment Concrete Removal and Repair Details
SA31	North Abutment Modification Details
SA32	South Abutment Modification Details
SA33	North Abutment Concrete Removal and Repair Details
SA34	South Abutment Concrete Removal and Repair Details
SA35	North Abutment Modification Details
SA36	South Abutment Modification Details
SA37	Pier Concrete Removal and Repair Details
SA38	Pier Concrete Removal and Repair Details
SA39	Pier Modification Details
SA40	Bar Splicer Assembly and Mechanical Splicer Details

For existing bridge plans, see Sheets SAX1 thru SAX25 immediately following Sheet SA40.

TOTAL BILL OF MATERIAL

	ITEM	UNIT	SUPER	SUB	TOTAL
	Removal of Existing Superstructures No. 1	Each	1		1
	Removal of Existing Superstructures No. 2	Each	1		1
	Concrete Removal	Cu Yd		112.2	112.2
	Slope Wall Removal	Sq Yd		8	8
	Protective Shield	Sq Yd	931		931
	Structure Excavation	Cu Yd		392	392
	Floor Drains	Each	8		8
	Concrete Structures	Cu Yd		145.7	145.7
	Concrete Superstructure	Cu Yd	718.6		718.6
	Bridge Deck Grooving	Sq Yd	2,142		2,142
	Protective Coat	Sq Yd	2,780		2,780
*	Furnishing and Erecting Structural Steel	L Sum	0.39		0.39
	Stud Shear Connectors	Each	11,448		11,448
	Reinforcement Bars, Epoxy Coated	Pound	194,960	30,680	225,640
	Bar Splicers	Each	1,564	208	1,772
	Slope Wall 4 Inch	Sq Yd		8	8
	Name Plates	Each	2		2
	Elastomeric Bearing Assembly, Type I	Each	24		24
	Elastomeric Bearing Assembly, Type II	Each	12		12
	Anchor Bolts, 1"	Each	72		72
	Anchor Bolts, 1 3/4" (Modified)	Each	24		24
**	Epoxy Crack Injection	Foot		18	18
	Geocomposite Wall Drain	Sq Yd		104	104
**	Structural Repair of Concrete (Depth Equal to or Less Than 5 Inches)	Sq Ft		75	75
**	Structural Repair of Concrete (Depth Greater Than 5 Inches)	Sq Ft		5	5
	Temporary Sheet Piling	Sq Ft		1,488	1,488
	Pipe Underdrains for Structures 4"	Foot		274	274
	Granular Backfill for Structures	Cu Yd		384	384

* Remainder of this item is installed with other structures in this Contract. See other structures for remaining quantity.

** Quantity includes a contingency (above the amounts shown in the bills of material) to account for uncertainties associated with the condition of the existing substructure and the age of the original inspections (2008-2009). Actual repair areas will be determined by the Engineer in the field.

STATION 104+81.00
RE-BUILT 20__ BY
STATE OF ILLINOIS
FAP 372-SEC. 2013-038B-R
LOADING HL-93
STRUCTURE NO. 016-1000

SB NAME PLATE
(See Std. 515001)

STATION 104+81.00
RE-BUILT 20__ BY
STATE OF ILLINOIS
FAP 372-SEC. 2013-038B-R
LOADING HL-93
STRUCTURE NO. 016-1001

NB NAME PLATE
(See Std. 515001)

Existing Name Plate shall be cleaned and relocated next to the new Name Plate. Cost included with Name Plates.

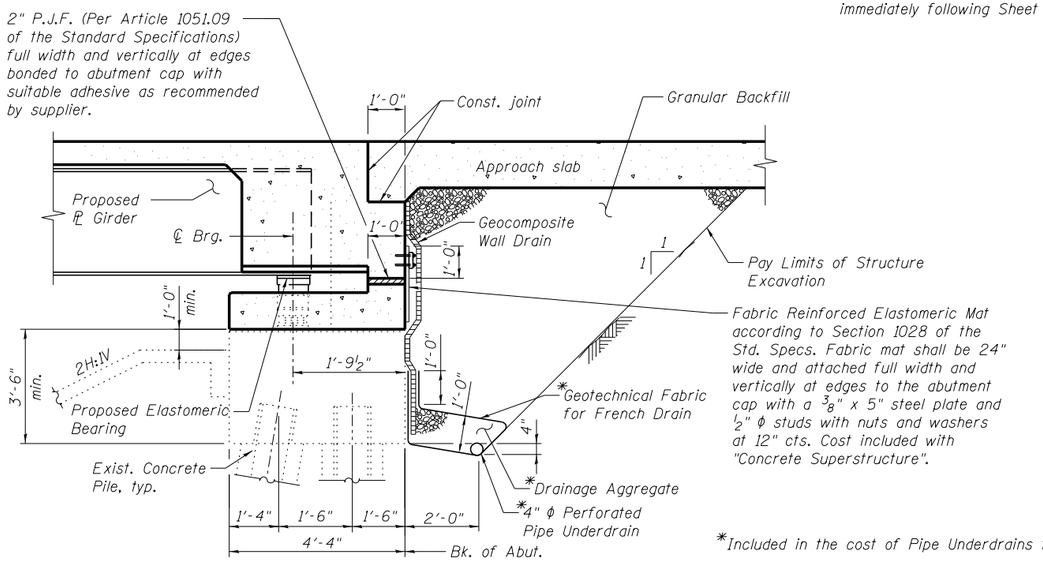

SECTION THRU ABUTMENTS

*Included in the cost of Pipe Underdrains for Structures.

All drainage system components shall extend to 2'-0" from the end of each wingwall except an outlet pipe shall extend until intersecting with the side slopes. The pipes shall drain into concrete headwalls. (See Article 601.05 of the Standard Specifications and Highway Standard 601101).

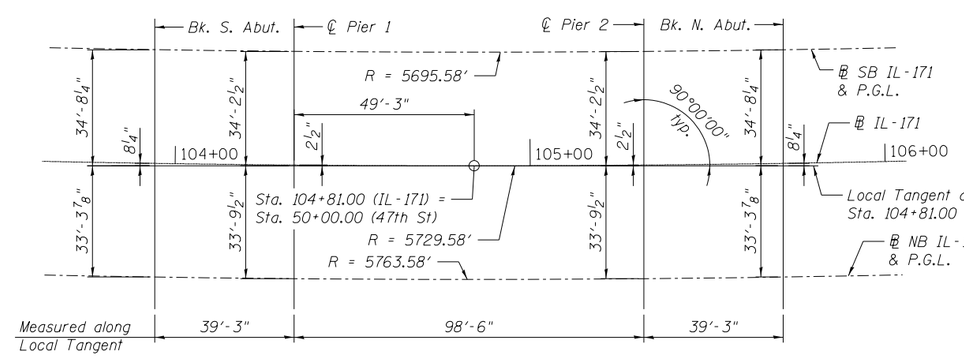

OFFSET SKETCH

N

benesch
engineers · scientists · planners
Alfred Benesch & Company
205 North Michigan Avenue, Suite 2400
Chicago, Illinois 60601
312-565-0450 Job No. 10093

FILE NAME =	USER NAME = jsurber	DESIGNED - JOB	REVISED -
		CHECKED - DJM	REVISED -
0161000.60J16.002.gennotes.dgn	PLOT SCALE =	DRAWN - MAK	REVISED -
	PLOT DATE = 12/20/2012	CHECKED - RMM	REVISED -

STATE OF ILLINOIS
DEPARTMENT OF TRANSPORTATION

GENERAL NOTES, INDEX OF SHEETS AND TOTAL BILL OF MATERIAL
STRUCTURE NO. 016-1000/1001
SHEET NO. SA2 OF SA40 SHEETS

F.A.P. RTE.	SECTION	COUNTY	TOTAL SHEETS	SHEET NO.
372	2013-038B-R	COOK	821	250
		CONTRACT NO. 60J16		
		ILLINOIS FED. AID PROJECT		

X:\10000S\10093\Eng_Docs_Phase_II\SN_016_1000_1001_1st_Ave_over_47th_St\Final\0161000_60J16_002_gennotes.dgn 7/14/2014 9:18:55 AM