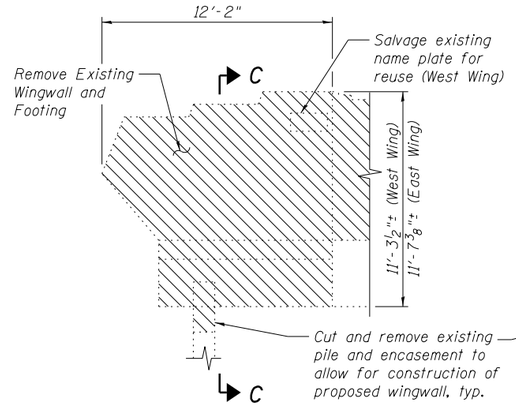

TYPICAL WINGWALL ELEVATION

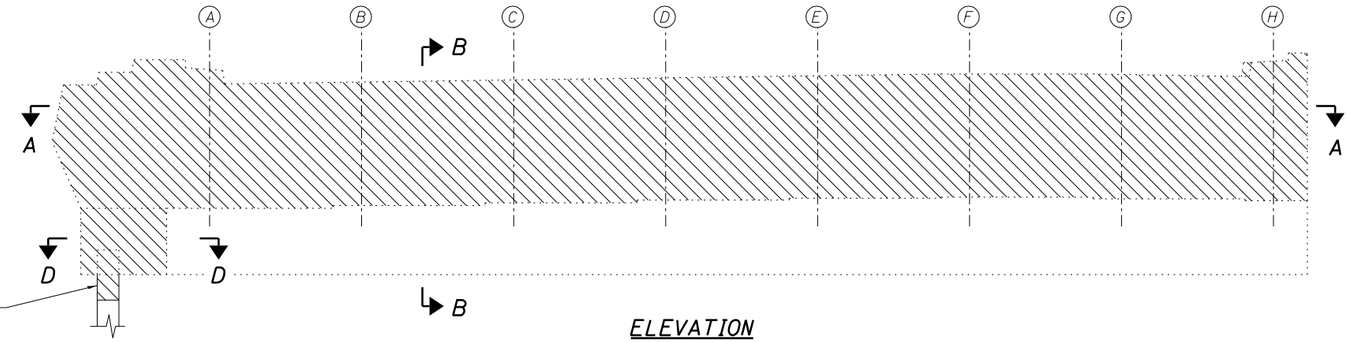

ELEVATION

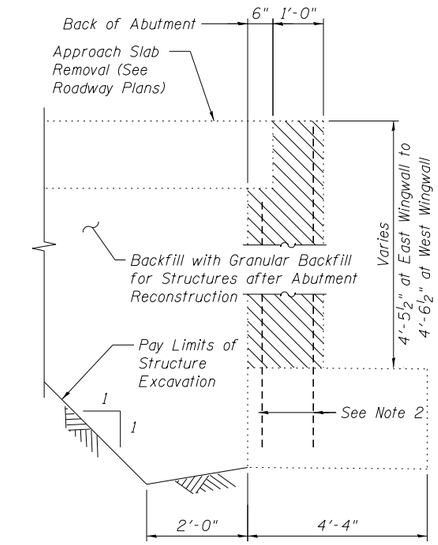

SECTION B-B

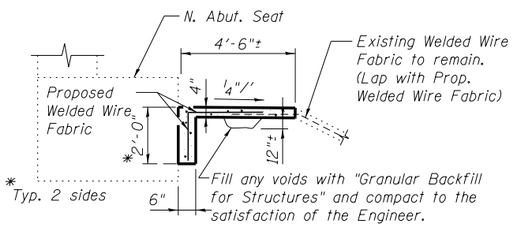

SECTION THRU SLOPE WALL REMOVAL AND SLOPE WALL 4 INCH

(west end of S.N. 016-2455 abutment, approx. 15' in length)

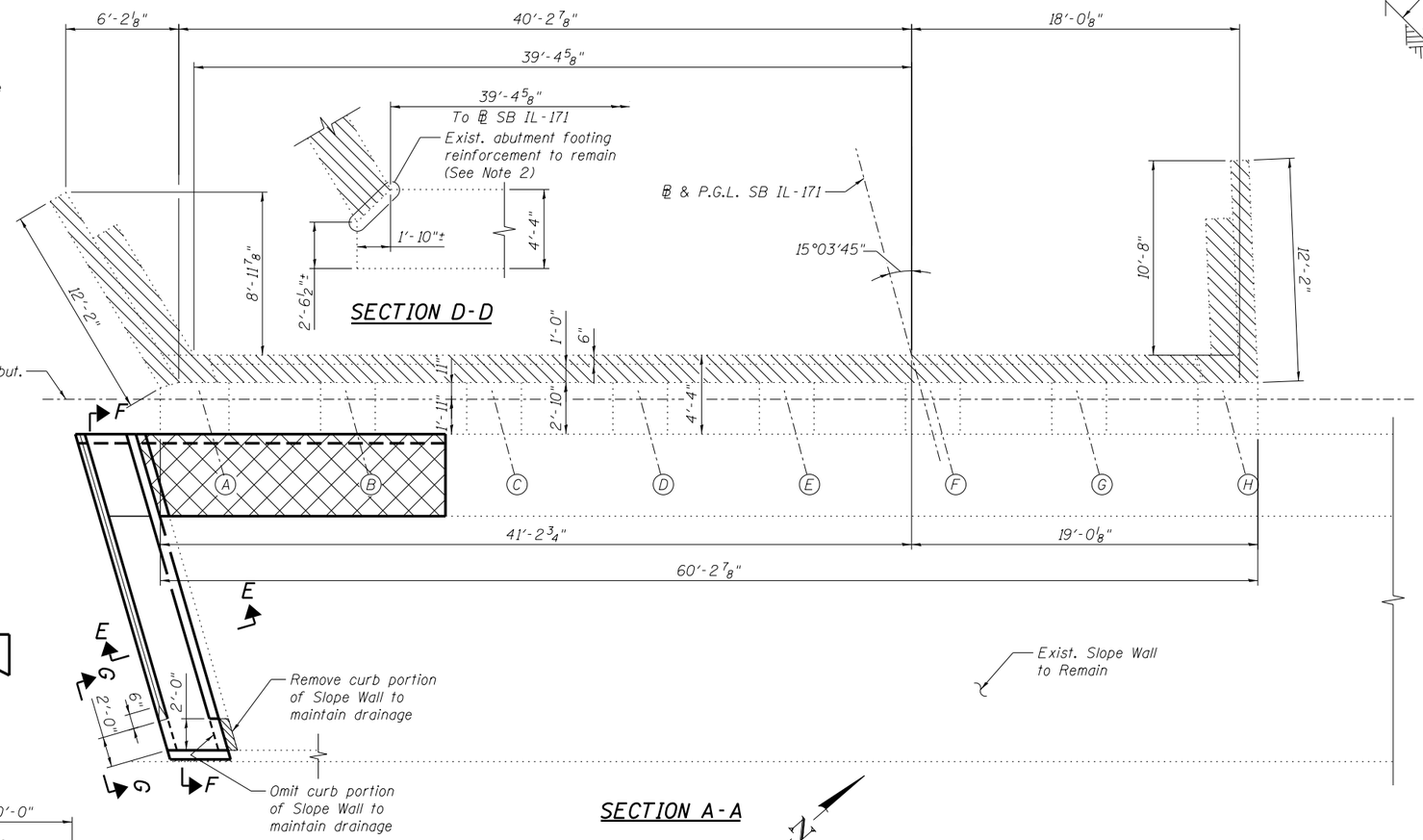

SECTION D-D

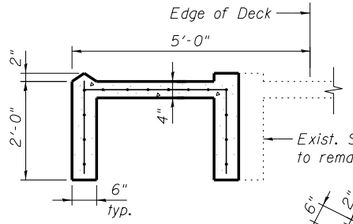

SECTION E-E

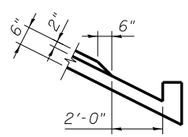

VIEW G-G

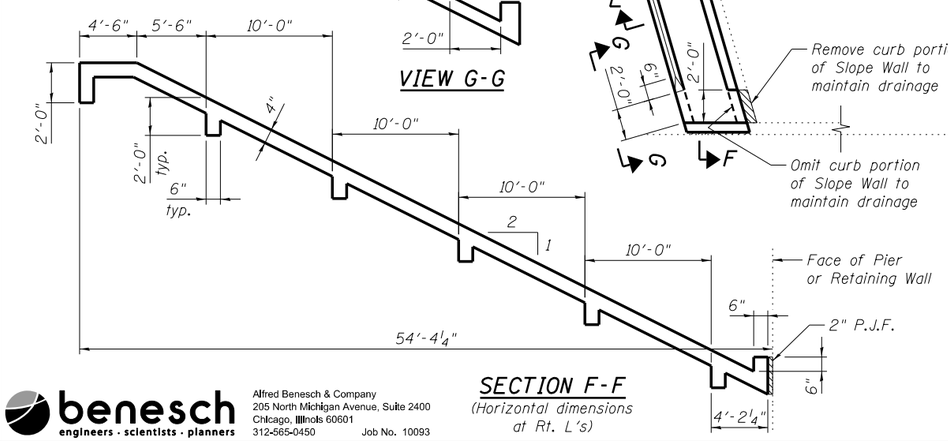

SECTION F-F

(Horizontal dimensions at Rt. L's)

SECTION A-A

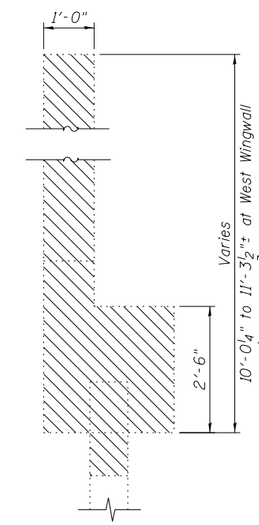

SECTION C-C

LEGEND

- Concrete Removal
- Slope Wall Removal and Slope Wall 4 Inch

NOTES:

1. Actual quantities of repairs shall be approved by the Engineer.
2. Existing reinforcement shall be cleaned and incorporated into the new construction. Cost included with "Concrete Removal".
3. Slope wall shall be reinforced with welded wire fabric, 6 in. X 6 in. W4.0 x W4.0, weighing 58 lbs per 100 sq ft.
4. Any reinforcement bars that are damaged during concrete removal operations shall be repaired or replaced using an approved bar splicer or anchorage system. Cost incidental to "Concrete Removal".

BILL OF MATERIAL

ITEM	UNIT	TOTAL
Structure Excavation	Cu. Yd.	92
Granular Backfill for Structures	Cu. Yd.	78
Concrete Removal	Cu. Yd.	27.0
Slope Wall Removal	Sq Yd	8
Slope Wall 4 Inch	Sq Yd	21

benesch
engineers · scientists · planners
Alfred Benesch & Company
205 North Michigan Avenue, Suite 2400
Chicago, Illinois 60601
312-565-0450
Job No. 10093

FILE NAME = 0162455_60J16_028_abutremoval&repair.dgn	USER NAME = jsurber	DESIGNED - JDM	REVISED -
		CHECKED - RDK	REVISED -
	PLOT SCALE =	DRAWN - MAK	REVISED -
	PLOT DATE = 12/20/2013	CHECKED - JDM	REVISED -

STATE OF ILLINOIS
DEPARTMENT OF TRANSPORTATION

NORTH ABUTMENT CONCRETE REMOVAL AND REPAIR DETAILS
STRUCTURE NO. 016-2455

SHEET NO. SC28 OF SC35 SHEETS

F.A.P. RTE.	SECTION	COUNTY	TOTAL SHEETS	SHEET NO.
372	2013-038B-R	COOK	821	354
		CONTRACT NO. 60J16		
		ILLINOIS FED. AID PROJECT		

X:\10000S\10093\Eng_Docs_Phase_II\SN_016_2454_2455_1st_Ave_over_AT&SF_RR\Final\0162455_60J16_028_abutremoval&repair.dgn
1:29:15 PM
7/23/2014