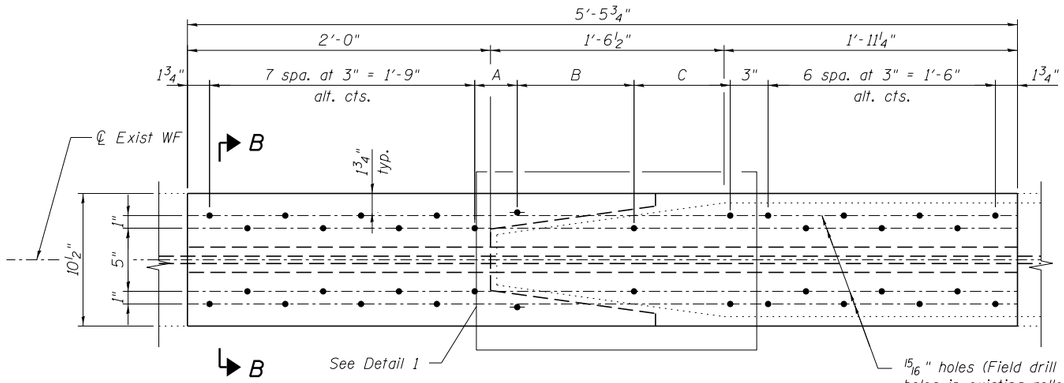


## COVER PLATE RETROFIT

(See note 2)
(36 bolts per retrofit)
(24 Locations, 20 Top & 4 Bottom)

Note: Locations of Cover Plate Retrofit are symmetrical about the ℄ of the existing cover plate.

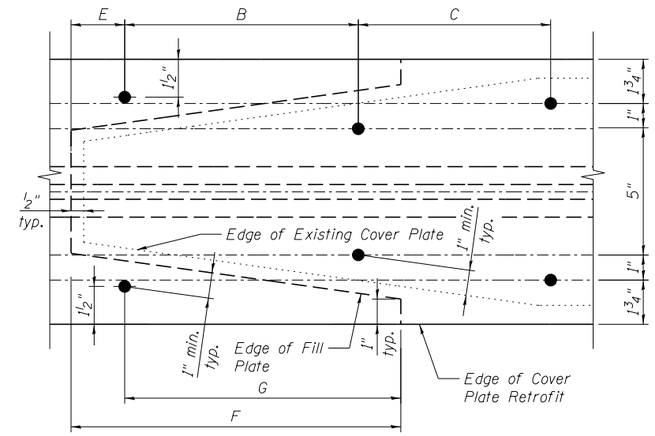


## DETAIL 1

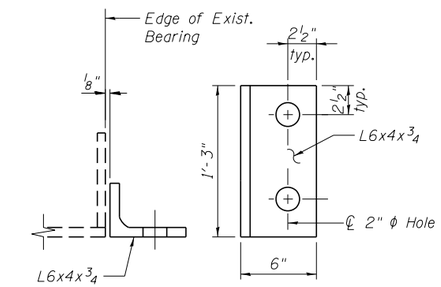


## SIDE RETAINER REPLACEMENT

(1 Location)
(See sheet SG52 for location of side retainer replacement)

## BILL OF MATERIAL

| ITEM | UNIT | TOTAL |
|---|---|---|
| Structural Steel Removal | Pound | 125,740 |
| Remove Conduit Attached to Structure | Foot | 1,950 |
| Structural Steel Repair | Pound | 7,270 |
| Anchor Bolts, 1" | Each | 4 |
| Anchor Bolts, 1½" | Each | 2 |

## COVER PLATE RETROFIT DIMENSION TABLE

| Unit | A | B | C | E | F | G |
|---|---|---|---|---|---|---|
| C | 3⅜" | 9¼" | 7⅝" | 2⅛" | 1'-1⅛"(-) | 11"(-) |
| D | 7⅝" | 7⅝" | 5" | 6⅜" | 1'-2⅝"(-) | 8¼"(-) |
| | | | | | | |

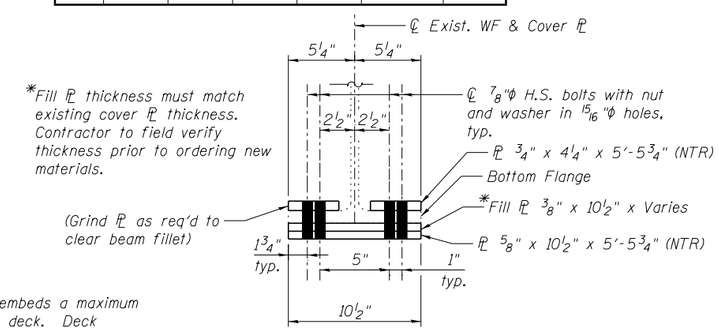


## SECTION B-B

(Bottom shown, Top similar)

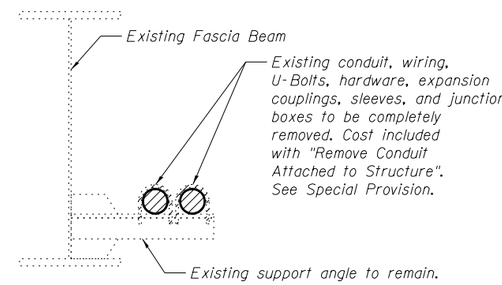


## CONDUIT REMOVAL DETAIL

(Wide Flange Detail)

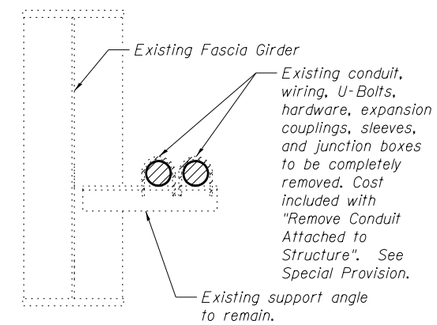


## CONDUIT REMOVAL DETAIL

(Plate Girder Detail)

## NOTES:

1. See Sheet SG53 for locations of cover plate retrofit.
2. Cost of furnishing all labor, equipment, and materials necessary to furnish and install the cover plate retrofit detail shall be included with "Structural Steel Repair". See Special Provision. Quantity listed on this sheet is calculated for gross section of plate with voids for bolts holes not accounted for.
3. Load carrying components designated "NTR" shall confirm to the Impact Testing Requirement, Zone 2.
4. Structural Steel Plates for cover plate retrofit shall conform to the requirements of AASHTO M270 Grade 50.
5. Cost of field drilling for cover plate retrofit included with "Structural Steel Repair".
6. Cost of field splice repair included with "Structural Steel Repair".
7. For field splice repair, holes in new steel shall be subpunched or subdrilled 13/16" dia. and reamed in the field to 15/16" dia. Reuse existing holes in existing steel. Contractor to field verify location, size and spacing of existing holes prior to ordering new materials. Cost included with "Structural Steel Repair".
8. New ⅞" dia. fasteners shall be ASTM A325 Type 1, mechanically galvanized bolts.

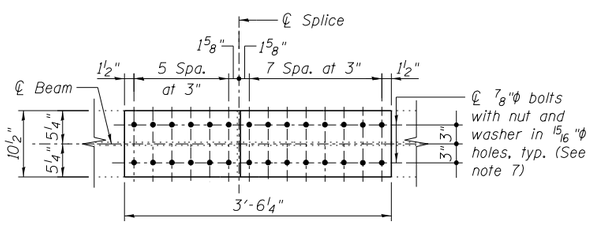


## PROPOSED BOTTOM FLANGE SPLICE

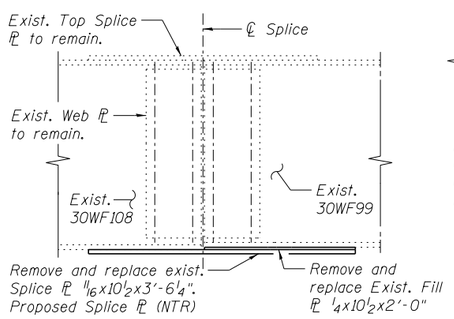


## FIELD SPLICE REPAIR DETAIL

Note: No load other than self-weight of the steel beam may be present while the existing splice PL's are removed. See sheet SG53 for location of field splice repair.

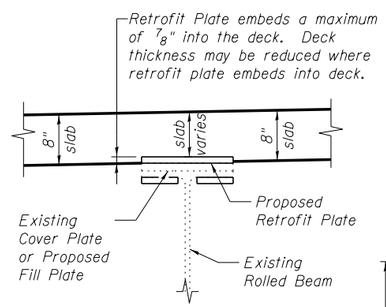


## COVER PLATE RETROFIT EMBEDMENT

● Proposed ¾" ϕ x 4" min. granular or solid flux filled headed studs automatically end welded to flange or splice PL (No. required = 1,072)
○ Existing ¾" x 4" Shear Studs
⊗ Existing ⅞" ϕ Bolts

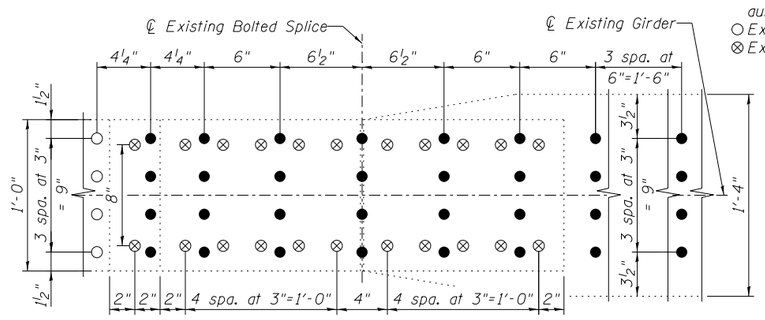


## NEW STUD SPACING AT EXISTING BOLTED SPLICES SPANS 3 & 5

(Existing Field Splice No. 1 in Span 3 shown, Field Splice No. 4 in Span 5 opposite hand)
(16 Locations)

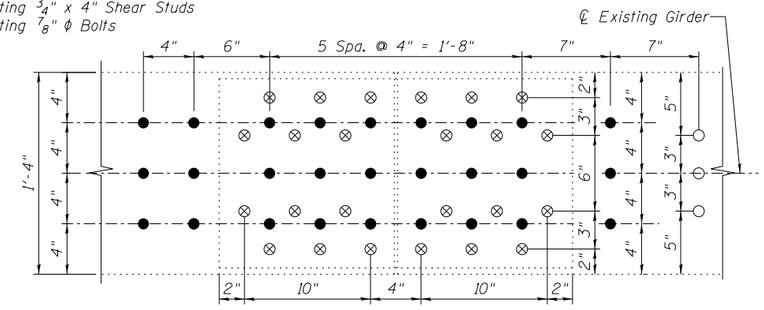


## NEW STUD SPACING AT EXISTING BOLTED SPLICES SPAN 4

(Existing Field Splice No. 2 in Span 4 shown, Field Splice No. 3 in Span 4 opposite hand)
(16 Locations)

benesch engineers · scientists · planners
Alfred Benesch & Company
205 North Michigan Avenue, Suite 2400
Chicago, Illinois 60601
312-565-0450 Job No. 10093

| | | | |
|---|---|---|---|
| FILE NAME = 0160486_60J16_054_Steel_Repair_Details_1_of_2.dgn | USER NAME = jsurber | DESIGNED - DTS | REVISED - |
| | | CHECKED - TPS | REVISED - |
| | PLOT SCALE = 1:20 dgn | DRAWN - KMS | REVISED - |
| | PLOT DATE = 8/6/2014 | CHECKED - TPS | REVISED - |

STATE OF ILLINOIS
DEPARTMENT OF TRANSPORTATION

STRUCTURAL STEEL REPAIR DETAILS (1 OF 2)
STRUCTURE NO. 016-0486

SHEET NO. SG54 OF SG100 SHEETS

| F.A.P. RTE. | SECTION | COUNTY | TOTAL SHEETS | SHEET NO. |
|---|---|---|---|---|
| 373 | 2013-038B-R | COOK | 821 | 644 |
| | | CONTRACT NO. 60J16 | | |
| | | ILLINOIS FED. AID PROJECT | | |

Y:\chicago\10000S\10093\Eng_Docs_Phase_II\SN_016_0486_0487_1st_Ave_over_Canal\Final\Final_0486\0160486_60J16_054_Steel_Repair_Details_1_of_2.dgn 7:30:33 PM 8/6/2014