F.A. RTE.	SECTION	EXPRESSWAYS	TOTAL SHEETS	SHEET NO.
133	0707-626B	SOUTHWEST	95	29
STA.		TO STA.		

FED. ROAD DIST. NO. 7 ILLINOIS FED. AID PROJECT

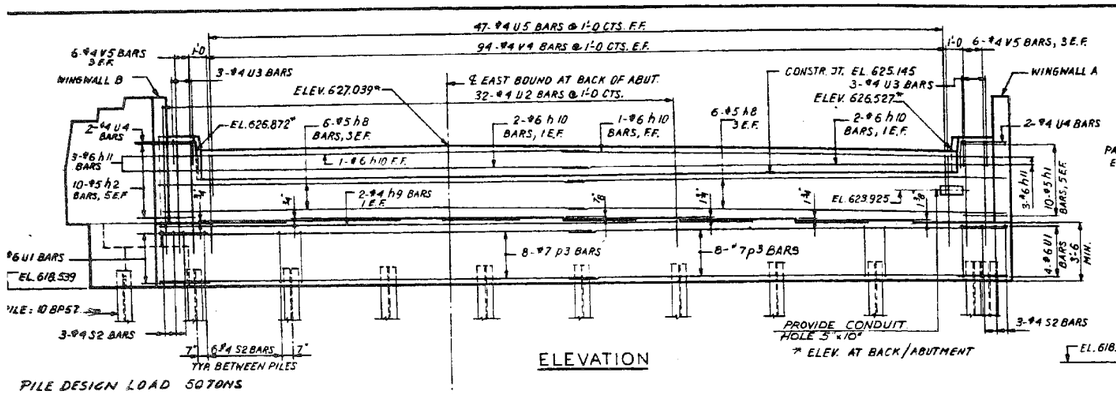

ELEVATION

PILE DESIGN LOAD 50 TONS

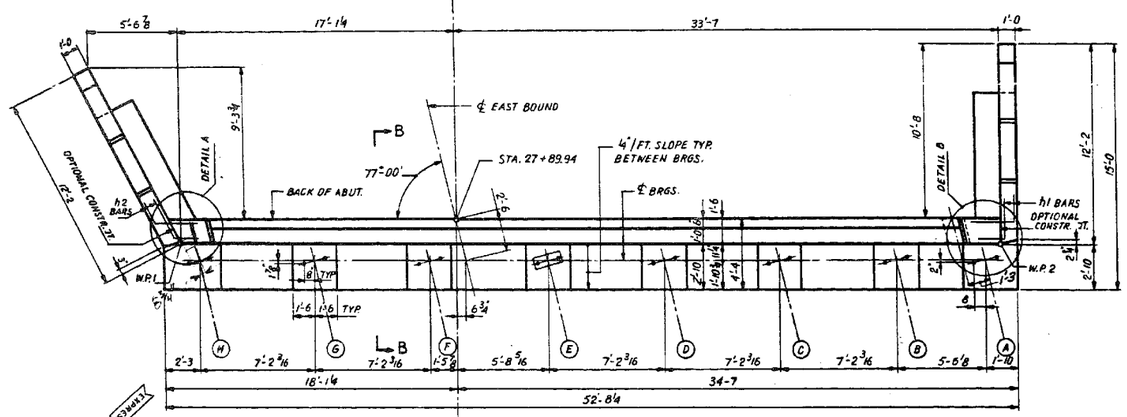

TOP VIEW

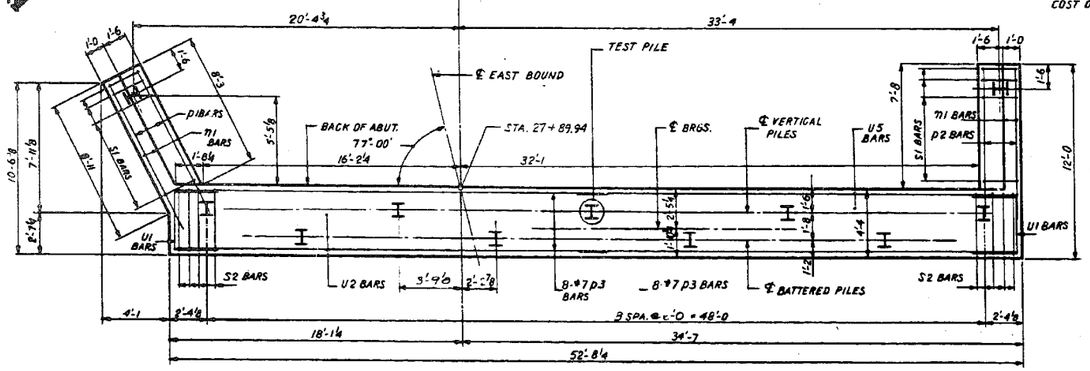

FOOTING PLAN

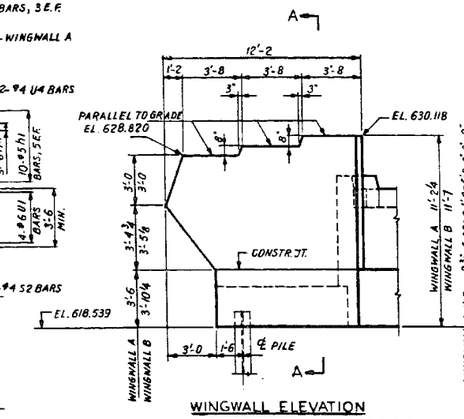

WINGWALL ELEVATION

WINGWALL B SHOWN, WINGWALL A REVERSED

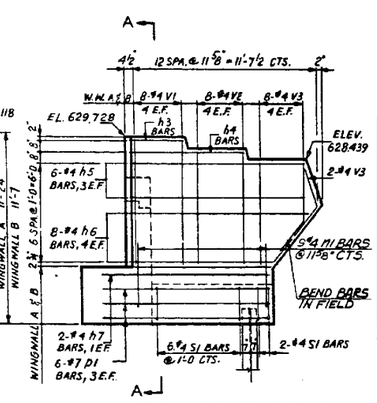

WINGWALL REINFORCEMENT

WINGWALL A SHOWN, WINGWALL B REVERSED

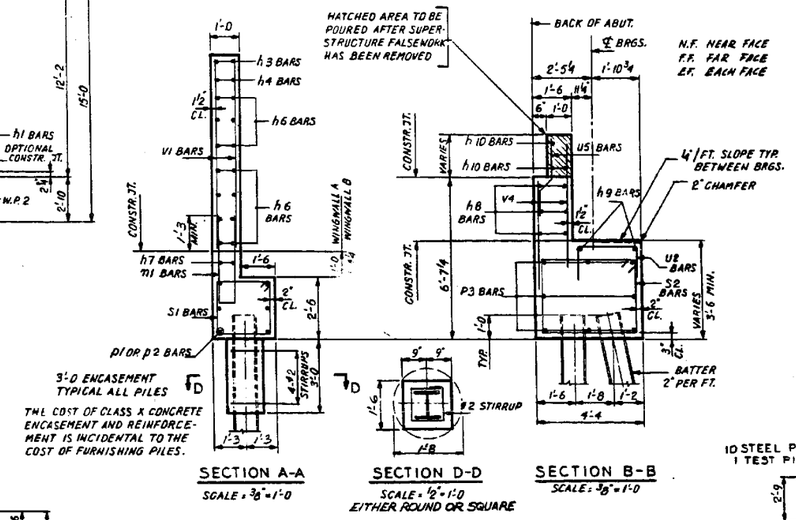

SECTION A-A

SCALE = 3/8" = 1'-0

SECTION D-D

SCALE = 1/2" = 1'-0

EITHER ROUND OR SQUARE

SECTION B-B

SCALE: 3/8" = 1'-0

BILL OF REINFORCEMENT				
BAR	NO.	SIZE	LENGTH	SHAPE
h1	10	5	4'-3	
h2	10	5	4'-6	
h3	4	4	3'-2	
h4	4	4	6'-10	
h5	12	4	10'-6	
h6	16	4	11'-8	
h7	4	4	9'-3	
h8	12	5	26'-10	
h9	2	4	32'-2	
h10	6	6	24'-0	
h11	6	6	2'-9	
m1	18	4	8'-5	
p1	6	7	10'-0	
p2	6	7	9'-3	
p3	16	7	27'-1	
S1	16	4	9'-5	
S2	54	4	15'-1	
U1	8	6	7'-6	
U2	32	4	6'-10	
U3	6	4	6'-2	
U4	4	4	5'-0	
U5	47	4	3'-6	
V1	16	4	7'-6	
V2	16	4	6'-11	
V3	20	4	6'-3	
V4	94	4	5'-1	
V5	12	4	6'-4	

EAST ABUT. E.B.	QUANTITIES	
CLASS X CONCRETE	CU. YDS.	54.4
REINFORCING BARS	LBS.	3,830
PILES 10 BP 57	LIN. FT.	660
TEST PILE 10 BP57	EA.	1

10 STEEL PILES 10BP57 AT 66' = 660 LIN. FT.
1 TEST PILE STEEL 10BP57

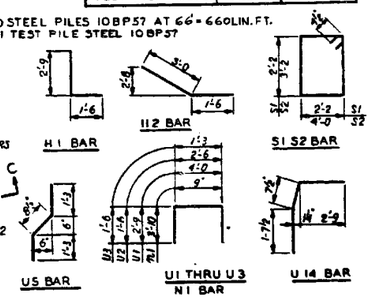

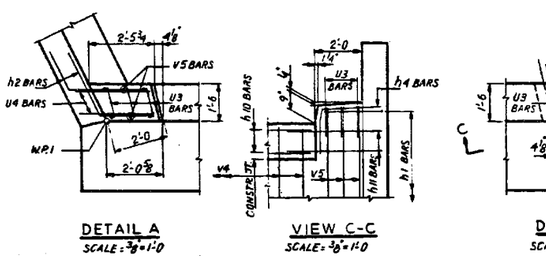

DETAIL A

SCALE: 3/8" = 1'-0

VIEW C-C

SCALE: 3/8" = 1'-0

DETAIL B

SCALE: 3/8" = 1'-0

BEARING SEAT ELEVATIONS AT BEAMS							
A	B	C	D	E	F	G	H
622.039	622.151	622.297	622.443	622.519	622.519	622.456	622.293

REVISIONS	
NAME	DATE
DESIGNED ST.	
REVIEWED C.W.W.	

ILLINOIS DIVISION OF HIGHWAYS

SOUTHWEST EXPRESSWAY

F.A. RT 133

LAWNDALE AVE. STRUCTURE OVER CHICAGO SANITARY AND SHIP CANAL

SECTION 0707-626 B

EAST ABUTMENT EAST BOUND

SCALE: HORIZ. 4"=1'-0 VERT. EXCEPT AS NOTED

DRAWN BY J. W.

DATE 8-5-65

CHECKED BY L.D.B.

benesch engineers · scientists · planners

Alfred Benesch & Company
205 North Michigan Avenue, Suite 2400
Chicago, Illinois 60601
312-565-0450 Job No. 10093

FOR INFORMATION ONLY

FILE NAME = 0160486_60J16_X05_exist_eabut.dgn	USER NAME = tjanicke	DESIGNED - FSM	REVISED -
		CHECKED - RMM	REVISED -
	PLOT SCALE =	DRAWN - FSM	REVISED -
	PLOT DATE = 6/23/2014	CHECKED - RMM	REVISED -

STATE OF ILLINOIS
DEPARTMENT OF TRANSPORTATION

EXISTING PLANS EAST ABUTMENT
STRUCTURE NO. 016-0486

SHEET NO. SGX5 OF SGX48 SHEETS

F.A.P. RTE.	SECTION	COUNTY	TOTAL SHEETS	SHEET NO.
373	2013-038B-R	COOK	821	695
		CONTRACT NO. 60J16		
		ILLINOIS FED. AID PROJECT		

6/23/2014 2:53:20 PM X:\100000S\10093\Eng_Docs_Phase_II\SN_016_0486_60J16_X05_exist_eabut.dgn

X:\100000S\10093\Eng_Docs_Phase_II\SN_016_0486_0487_1st_Ave_over_Canal\Final\0160486_60J16_X05_exist_eabut.dgn