Ⓔ 7-#5 v2(E) bars @ 12" cts. E.F.
Ⓕ 7-#5 h4(E) bars @ 6" cts. E.F.
Ⓖ 5-#5 h5(E) bars @ 12" cts. E.F.
Ⓗ 5-#5 t2(E) bars @ 12" cts. top and bott.
Ⓘ 5-#5 v3(E) bars @ 12" cts. F.F.

MINIMUM BAR LAP

#5 bar = 3'-3"
#7 bar = 5'-2"

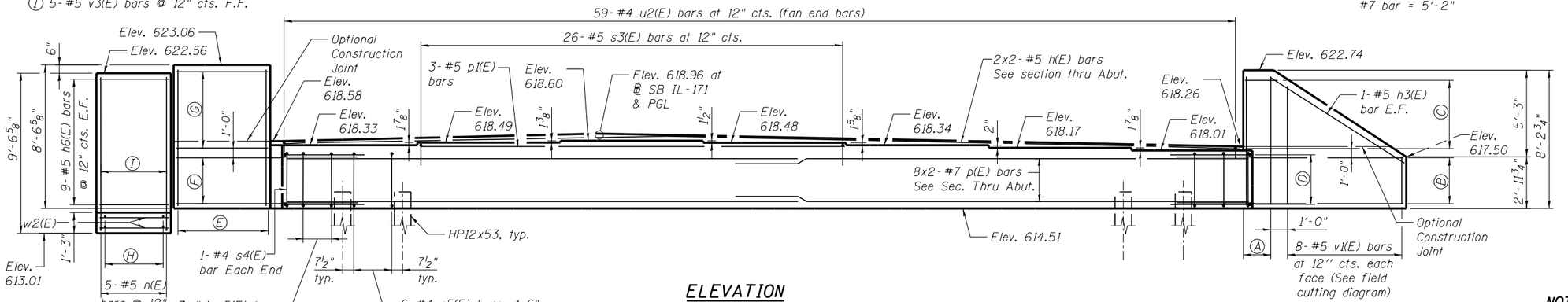

ELEVATION

(Looking South)

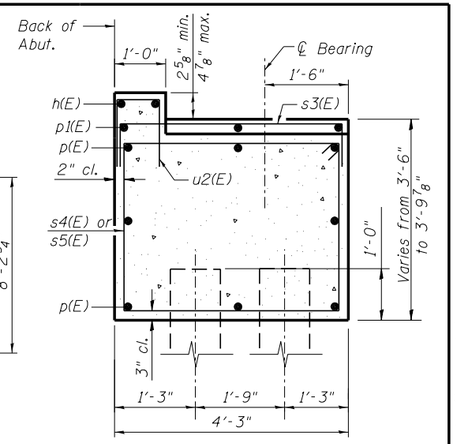

SEC. THRU ABUT.

Ⓐ 3-#5 v(E) bars @ 10" cts. E.F.
Ⓑ 7-#6 h1(E) bars @ 6" cts. E.F.
Ⓒ 5-#5 h2(E) bars @ 12" cts. E.F. (See field cutting diagram
Ⓓ 3-#6 u(E) bars each end 10'-0"

NOTES:

1. Pour steps monolithically with cap.
2. Space reinforcement to miss anchor bolts.
3. For details of piles, see sheet SA37
4. Ashlar Limestone Pattern (with natural concrete color) shall be applied to the entire front face of the wingwalls and wingwall extension. Paid for as Form Liner Textured Surface.

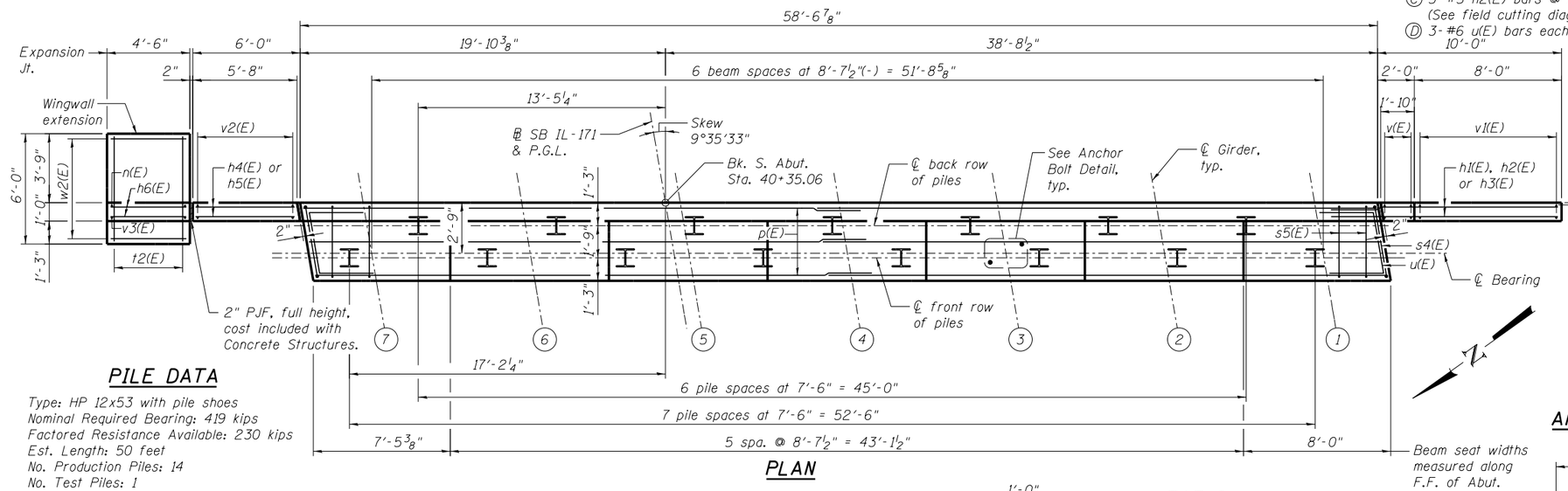

PILE DATA

Type: HP 12x53 with pile shoes
Nominal Required Bearing: 419 kips
Factored Resistance Available: 230 kips
Est. Length: 50 feet
No. Production Piles: 14
No. Test Piles: 1

PLAN

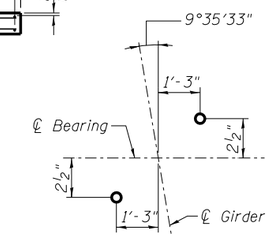

ANCHOR BOLT LAYOUT

BILL OF MATERIAL

Bar	No.	Size	Length	Shape
h(E)	4	#5	31'-0"	
h1(E)	14	#6	13'-10"	
h2(E)	5	#5	9'-6"	
h3(E)	2	#5	9'-5"	
h4(E)	14	#5	9'-3"	
h5(E)	10	#5	5'-6"	
h6(E)	18	#5	4'-2"	
n(E)	6	#5	9'-10"	
p(E)	16	#7	31'-11"	
p1(E)	3	#5	25'-6"	
s3(E)	26	#5	8'-7"	
s4(E)	2	#4	15'-3"	
s5(E)	90	#4	14'-11"	
t2(E)	10	#5	5'-8"	
u(E)	6	#6	11'-9"	
u2(E)	59	#4	5'-10"	
v(E)	6	#5	7'-10"	
v1(E)	8	#5	9'-8"	
v2(E)	14	#5	8'-3"	
v3(E)	5	#5	8'-2"	
w2(E)	14	#5	4'-2"	
Pile Shoes			Each	15
Concrete Structures			Cu. Yd.	42.9
Reinforcement Bars, Epoxy Coated			Pound	3,850
Furnishing Steel Piles HP12x53			Foot	700
Driving Piles			Foot	700
Test Pile Steel HP12x53			Each	1
Form Liner Textured Surface			Sq. Ft.	152
Concrete Sealer			Sq. Ft.	562

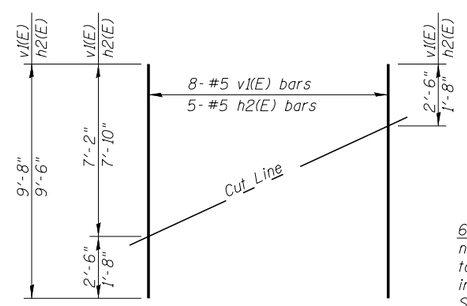

FIELD CUTTING DIAGRAM

Order v1(E) & h2(E) bars full length. Cut as shown and use remainder of bars in opposite face.

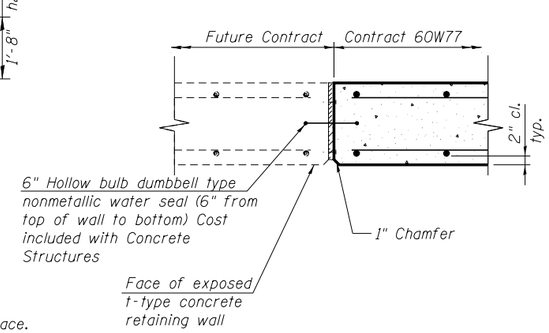

EXPANSION JOINT DETAIL

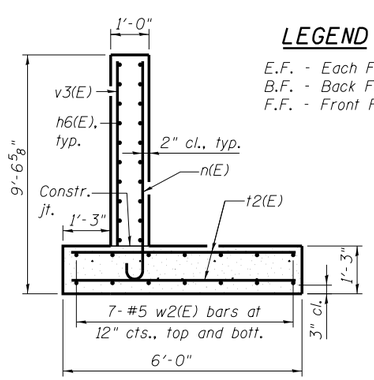

SECT. THRU WINGWALL EXTENSION

Maximum applied service bearing pressure = Qmax = 1.8 ksf

LEGEND

E.F. - Each Face
B.F. - Back Face
F.F. - Front Face

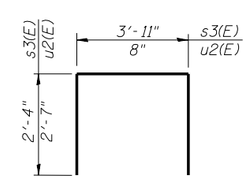

BARS s3(E) & u2(E)

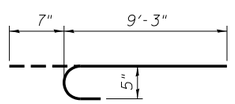

BAR n(E)

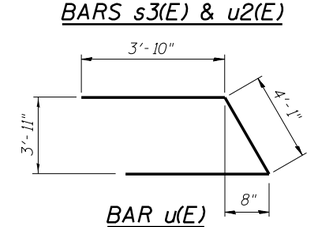

BAR u(E)

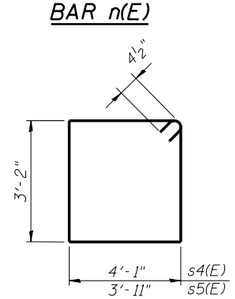

BARS s4(E) & s5(E)

benesch engineers · scientists · planners
Alfred Benesch & Company
205 North Michigan Avenue, Suite 2400
Chicago, Illinois 60601
312-565-0450 Job No. 10093

FILE NAME = 0161510_60W77_030_South_Abutment.dgn	USER NAME = ksnider	DESIGNED - JHG	REVISED -
		CHECKED - KWS	REVISED -
	PLOT SCALE =	DRAWN - SLV	REVISED -
	PLOT DATE = 6/23/2014	CHECKED - KWS	REVISED -

STATE OF ILLINOIS
DEPARTMENT OF TRANSPORTATION

SOUTH ABUTMENT DETAILS
STRUCTURE NO. 016-1510

SHEET NO. SA30 OF SA43 SHEETS

F.A.P. RTE.	SECTION	COUNTY	TOTAL SHEETS	SHEET NO.
373	(0707-608&611)HB-B	COOK	177	95

CONTRACT NO. 60W77
ILLINOIS FED. AID PROJECT

6/23/2014 10:56:39 AM X:\100005\10093\Eng_Docs_Phase_II\SN_016_1510_1511_1st_Ave_over_I55\Final\1510 Final\0161510_60W77_030_South_Abutment.dgn