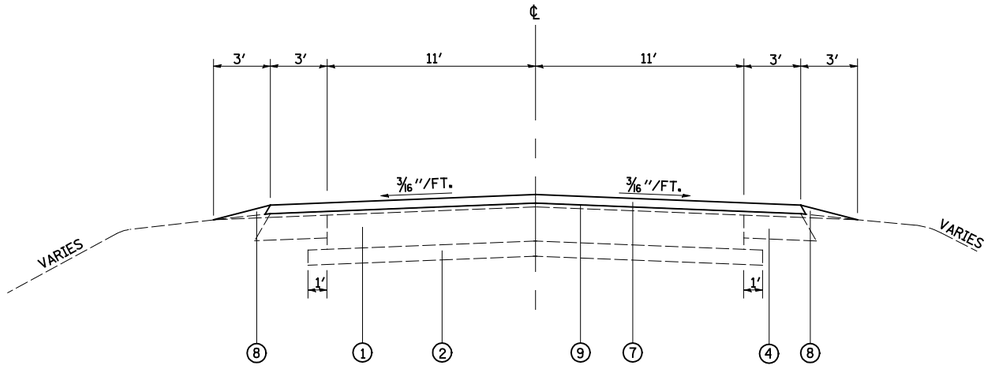

PROPOSED TYPICAL SECTION

STA. 624+34.70 TO STA. 624+94.23
STA. 651+53.50 TO STA. 652+10.00

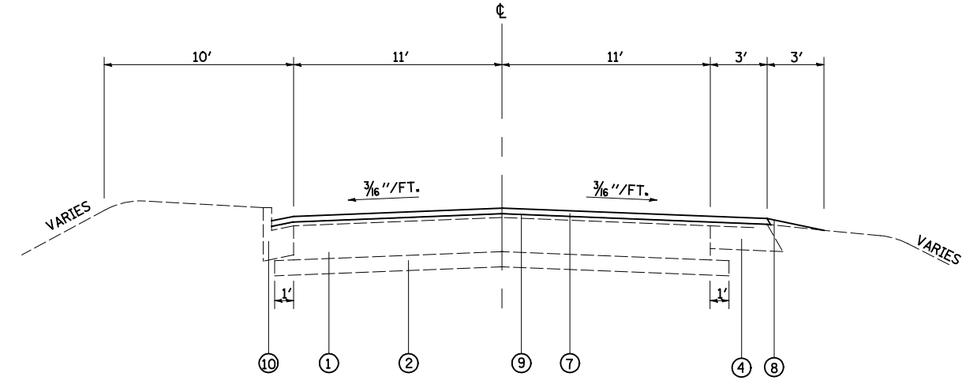

PROPOSED TYPICAL SECTION

STA. 638+25.97 TO STA. 638+84.70

NOTES:

STA. 624+94.23 TO STA. 638+25.97 (SN 079-0019)
STA. 638+84.70 TO STA. 648+11.00 (RESURFACING OMISSION)
STA. 648+67.50 TO STA. 648+73.50 (SN 079-0020 BRIDGE APPROACH PAVEMENT CONNECTOR)
STA. 648+73.50 TO STA. 649+03.50 (SN 079-0020 BRIDGE APPROACH SLAB WEST APPROACH)
STA. 649+03.50 TO STA. 651+17.50 (SN 079-0020)
STA. 651+17.50 TO STA. 651+47.50 (SN 079-0020 BRIDGE APPROACH SLAB EAST APPROACH)
STA. 651+47.50 TO STA. 651+53.50 (SN 079-0020 BRIDGE APPROACH PAVEMENT CONNECTOR)

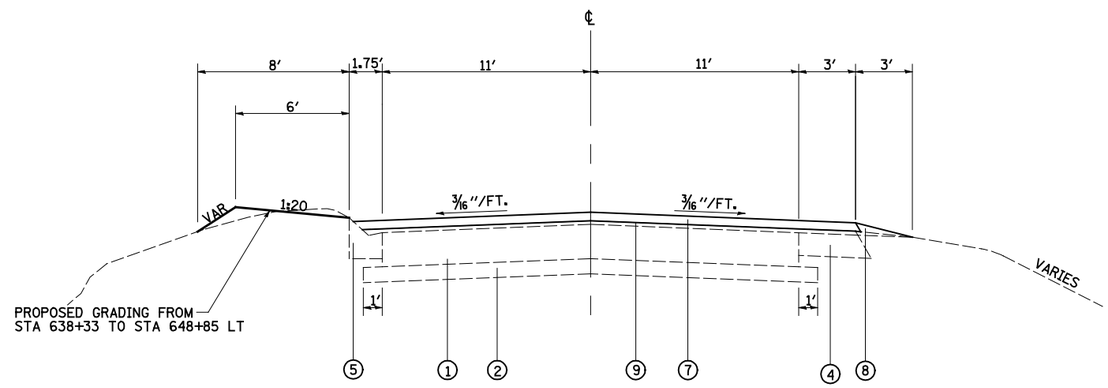

PROPOSED TYPICAL SECTION

STA. 648+11.00 TO STA. 648+73.50

LEGEND

1. EXISTING PCC PAVEMENT 9″
2. EXISTING SUB-BASE GRANULAR MATERIAL TYPE A, 4″
3. EXISTING AGGREGATE WEDGE SHOULDERS
4. EXISTING HMA SHOULDER 6″
5. EXISTING CONCRETE GUTTER TYPE B
6. EXISTING HMA RESURFACING, 2 1/2″ AND VARIES
7. PROPOSED HMA SURFACE COURSE MIX C, N70, 2″ AND VARIES, SEE MISCELLANEOUS DETAILS
8. PROPOSED AGGREGATE SHOULDER, TYPE B
9. PROPOSED BITUMINOUS MATERIALS (PRIME COAT)
10. EXISTING COMBINATION CONCRETE CURB AND GUTTER

FILE NAME = $FILEL$	USER NAME = Paul	DESIGNED - JWS	REVISED -	STATE OF ILLINOIS DEPARTMENT OF TRANSPORTATION	PROPOSED TYPICAL SECTIONS			F.A.S. RTE.	SECTION	COUNTY	TOTAL SHEETS / SHEET NO.
		DRAWN - PDB	REVISED -					858	12VB-1I	RANDOLPH	72 / 5
	PLOT SCALE = 40.0000 ′ / IN.	CHECKED - BRM	REVISED -							CONTRACT NO. 76409	
	PLOT DATE = 12/20/2011	DATE - 03-28-11	REVISED -		SCALE:	SHEET NO. 2 OF 2 SHEETS	STA. TO STA.		ILLINOIS	FED. AID PROJECT	