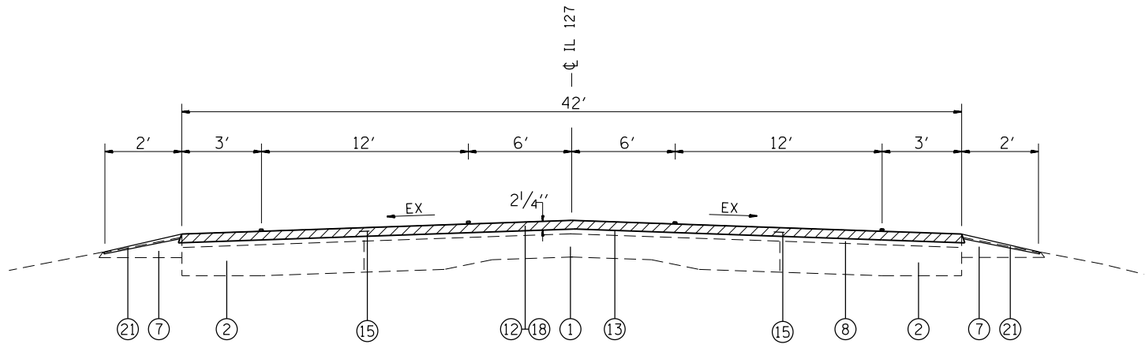

TYPICAL SECTION

MILLING DEPTH CHANGE STA. 193+50.81 TO STA. 193+65.81
INTERSECTION US 40 STA. 193+65.81 TO STA. 196+87.50
STA. 196+87.50 TO STA. 205+11.23

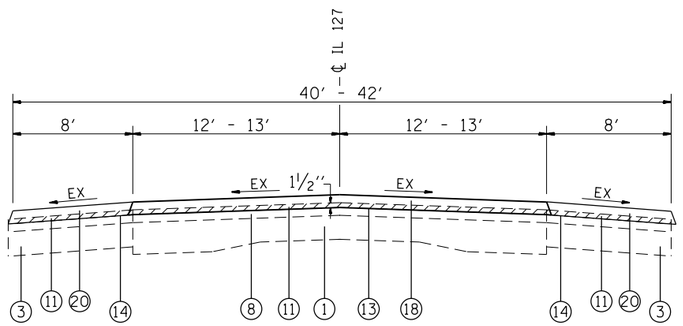

TYPICAL SECTION

STA. 174+45.00 TO STA. 188+51.53
STA. 244+65.00 TO STA. 249+20.69

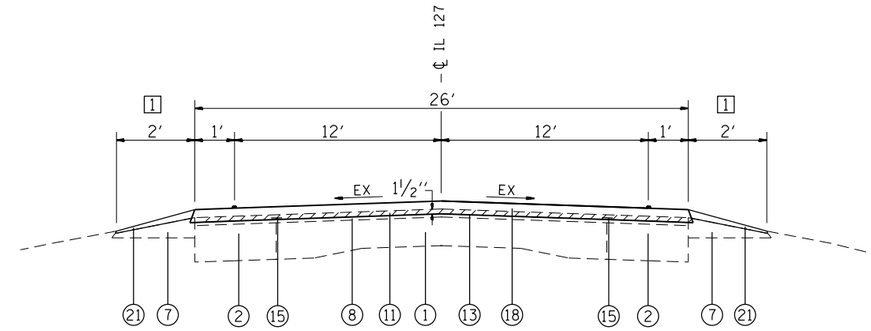

TYPICAL SECTION

STA. 249+20.69 TO STA. 275+92.16

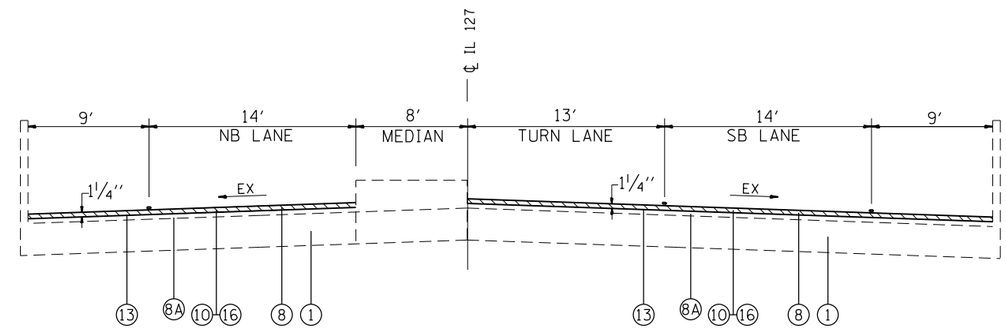

TYPICAL SECTION

STA. 208+38.00 TO STA. 209+53.00 (SN 003-0030)

NOTE: THE WATERPROOFING MEMBRANE SYSTEM AND EXPANSION JOINTS SHALL NOT BE DISTURBED DURING THE HOT-MIX ASPHALT SURFACE REMOVAL. IF EITHER IS DISTURBED THEY SHALL BE REPAIRED BY THE CONTRACTOR AT THE CONTRACTOR'S EXPENSE.

LEGEND

1. EXISTING PAVEMENT
2. EXISTING PAVEMENT WIDENING
3. EXISTING SHOULDER
4. EXISTING COMBINATION CURB & GUTTER TYPE B-6.24
5. EXISTING CURB
6. EXISTING V GUTTER
7. EXISTING AGGREGATE SHOULDER
8. EXISTING HMA RESURFACING

8A. EXISTING WATERPROOFING MEMBRANE ¾″

9. PROPOSED PCC SURFACE REMOVAL 1 ¼″
10. PROPOSED HMA SURFACE REMOVAL 1 ¼″
11. PROPOSED HMA SURFACE REMOVAL 1 ½″
12. PROPOSED HMA SURFACE REMOVAL 2 ¼″
13. PROPOSED POLYMERIZED BITUMINOUS MATERIALS (PRIME COAT)
14. PROPOSED BITUMINOUS MATERIALS (PRIME COAT)
15. PROPOSED STRIP REFLECTIVE CRACK CONTROL TREATMENT
16. PROPOSED POLYMERIZED HMA SURFACE COURSE, MIX D, N90 1 ¼″
17. PROPOSED POLYMERIZED HMA SURFACE COURSE, MIX D, N90 1 ½″
18. PROPOSED POLYMERIZED HMA SURFACE COURSE, MIX D, N90 2 ¼″
19. PROPOSED HMA SHOULDERS, 1 ½″
20. PROPOSED HMA SHOULDERS, 2 ¼″
21. PROPOSED AGGREGATE WEDGE SHOULDER, TYPE B

TYPICAL SECTION NOTES

1. WIDTH OF AGGREGATE WEDGE SHOULDER, TYPE B SHALL EXTEND TO GUARDRAIL FACE WHEN GUARDRAIL IS PRESENT AND MAINTAIN A 10:1 SLOPE OR FLATTER.
2. FOR MILLING DEPTH CHANGE STATION LIMITS, SEE DETAIL "PAVING TRANSITON TYPE A - MILLING DEPTH CHANGE."
3. LIMITED DATA WAS AVAILABLE FOR LOCATIONS OF PAVEMENT DEPTHS AND WIDENING. LOCATIONS SHOWN ARE ARE APPROXIMATE ONLY.

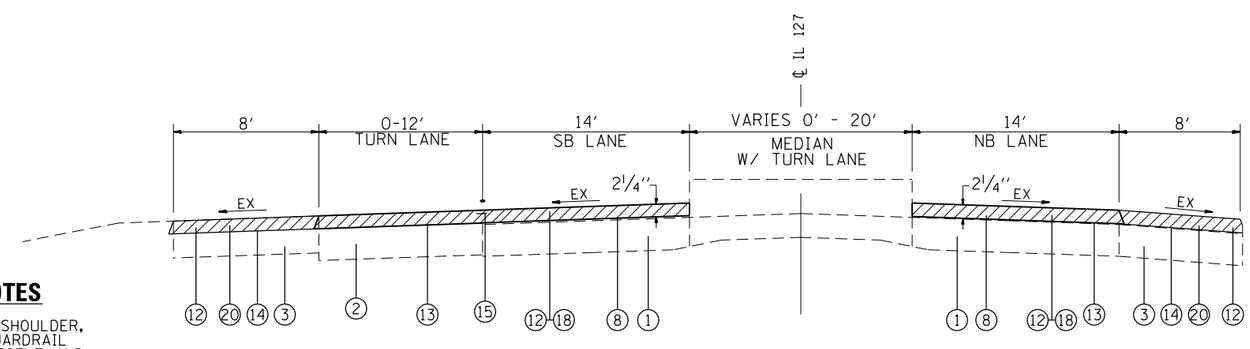

TYPICAL SECTION

STA. 205+11.23 TO STA. 208+38.00
STA. 209+53.00 TO STA. 225+91.98
BRIDGE OMISSION STA. 225+91.98 TO STA. 228+91.11 (SN 003-0031)
STA. 228+91.11 TO STA. 243+73.86

FILE NAME =	USER NAME = btindall	DESIGNED -	REVISED -	STATE OF ILLINOIS DEPARTMENT OF TRANSPORTATION	TYPICAL SECTIONS	F.A.P. RTE.	SECTION	COUNTY	TOTAL SHEETS / SHEET NO.
H:\6513 IDOT D8 Var\6513.12 WO 12 Greenville Resurfacing\CADD Sheets\D876G79-sht-typical.dgn		DRAWN -	REVISED -			42	(139-1,36-1,110-1)RS-1	BOND	68 / 12
	PLOT SCALE = 100.0000 ' / in.	CHECKED -	REVISED -					CONTRACT NO. 76G79	
Default	PLOT DATE = 6/13/2014	DATE -	REVISED -		SCALE: N.T.S. / SHEET 4 OF 4 SHEETS / STA. TO STA.		ILLINOIS FED. AID PROJECT		