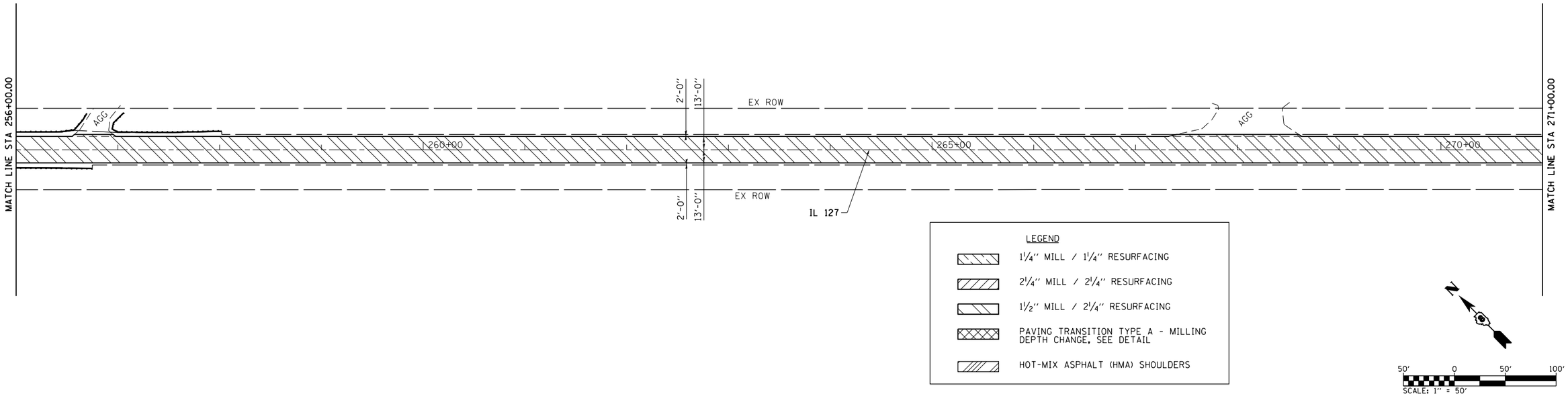

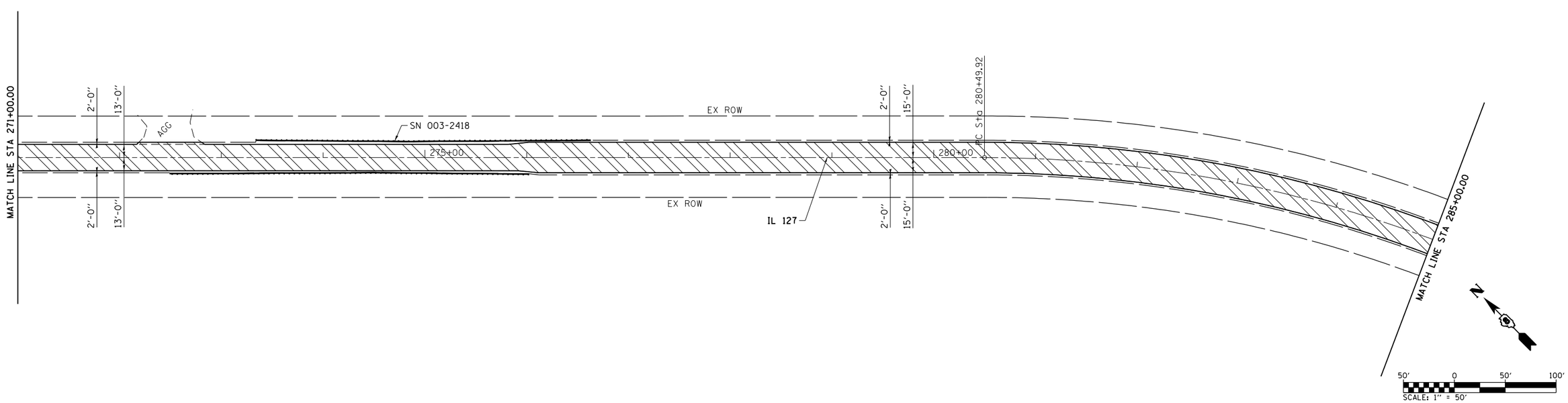

FILE NAME =	USER NAME = btindall	DESIGNED -	REVISED -
H:\6513 IDOT D8 Var\6513.12 WO 12 Greenville Resurfacing\CADD Sheets\D876G79-sht-plan.dgn		DRAWN -	REVISED -
	PLOT SCALE = 100.0000 ' / in.	CHECKED -	REVISED -
SHT 10.256+00 to 285+00	PLOT DATE = 6/13/2014	DATE -	REVISED -

STATE OF ILLINOIS
DEPARTMENT OF TRANSPORTATION

ILLINOIS ROUTE 127
ROADWAY RESURFACING PLAN

SCALE: 1" = 50' | SHEET 10 OF 11 SHEETS | STA. 256+00.00 TO STA. 285+00.00

F.A.P. RTE.	SECTION	COUNTY	TOTAL SHEETS	SHEET NO.
42	(139-1,36-1,110-1)RS-1	BOND	68	25

CONTRACT NO. 76G79

ILLINOIS FED. AID PROJECT