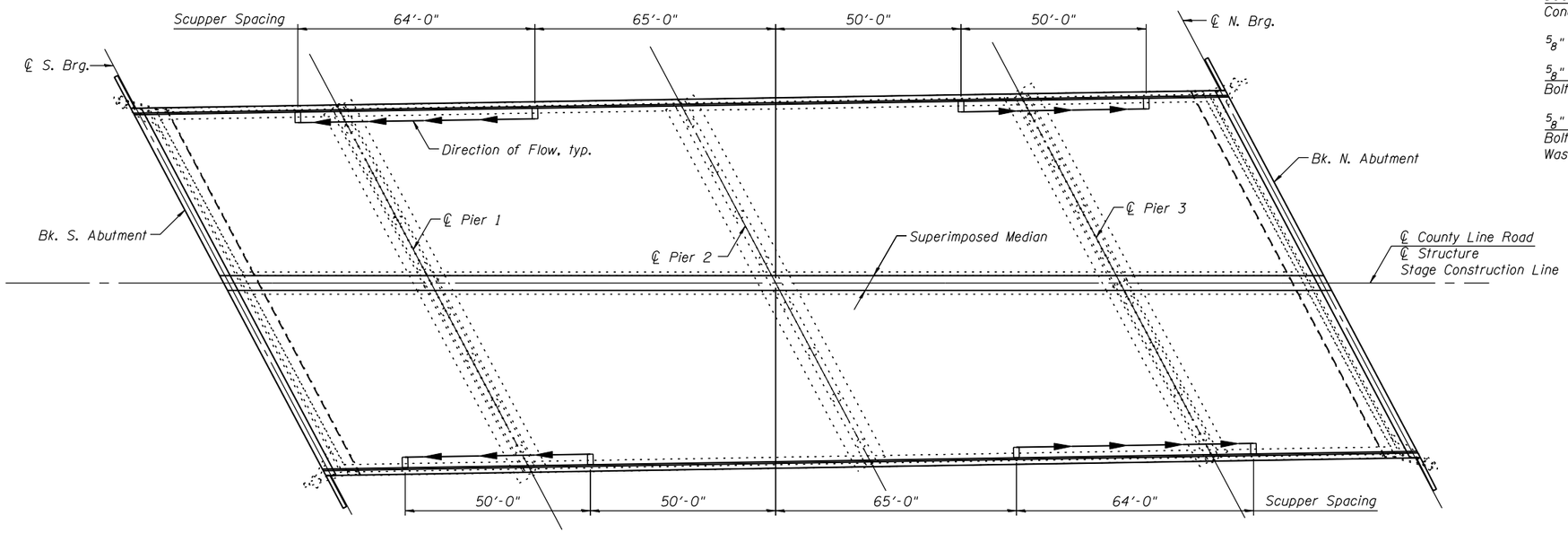

PLAN

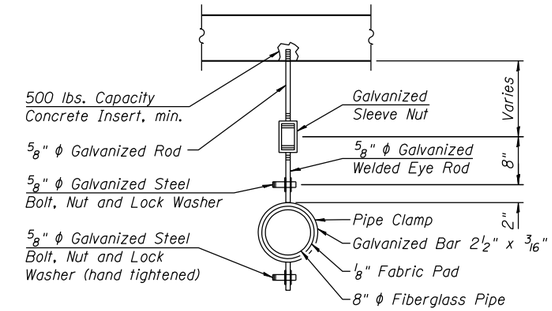

TYPICAL SECTION

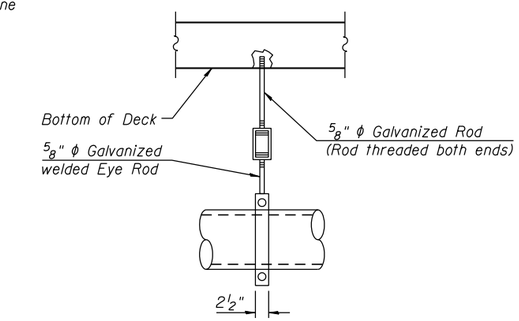

PIPE HANGER DETAIL

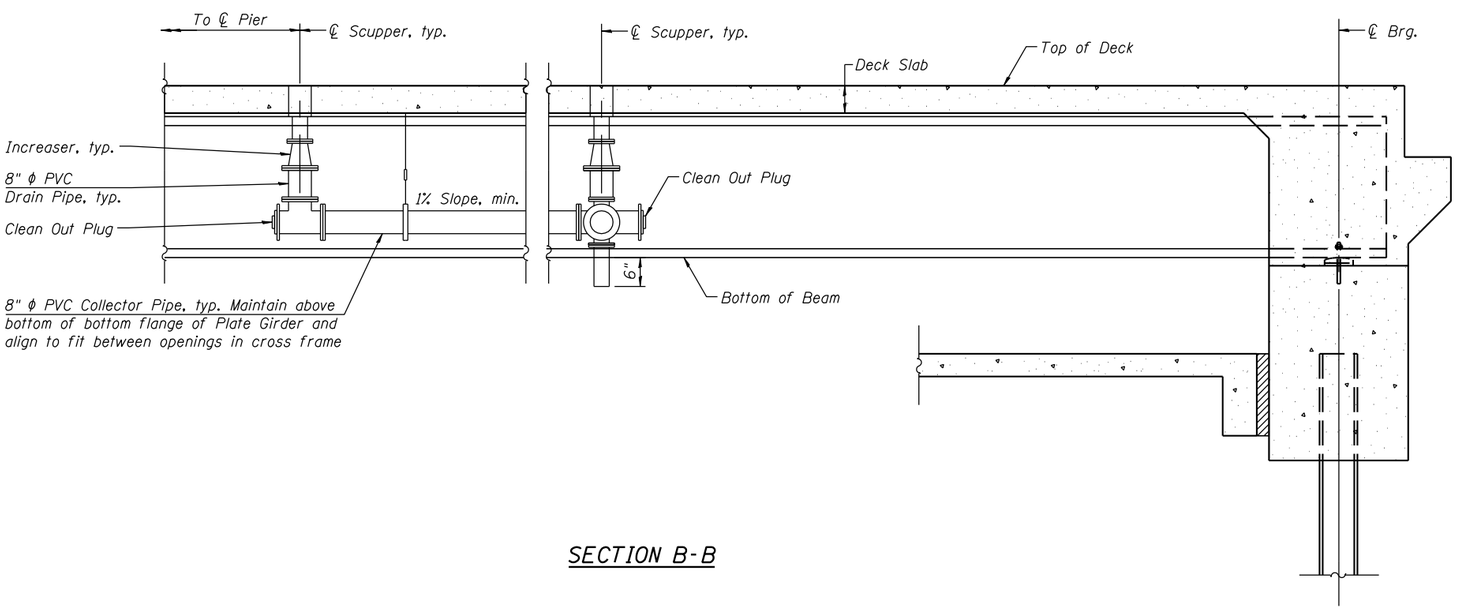

SECTION B-B

NOTES

1. See Special Provisions for additional requirements.
2. Pipe hangers shall have a load capacity of not less than 500 lbs.
3. Contractor to provide shop drawings for drainage system.

BILL OF MATERIAL

Item	Unit	Quantity
Drainage System	L Sum	1

FILE NAME = s:\jol\6300-6399\6346\028\micros\cadd sheets\structural\0160587-60K77-016-DS15.dgn

STRAND ASSOCIATES®
1170 SOUTH HOUBOLT ROAD
JOLIET, ILLINOIS 60431
(815) 744-4200

USER NAME = brianf	DESIGNED - RRD	REVISED -
	CHECKED - AJS	REVISED -
PLOT SCALE =	DRAWN - BJF	REVISED -
PLOT DATE = 1/29/2013	CHECKED - RRD	REVISED -

STATE OF ILLINOIS
DEPARTMENT OF TRANSPORTATION

DRAINAGE SYSTEM
STRUCTURE NO. 016-0587

SHEET NO. 17 OF 42 SHEETS

F.A.I. RTE.	SECTION	COUNTY	TOTAL SHEETS	SHEET NO.
55	22-1HB-R	COOK/DUPAGE	161	105

CONTRACT NO. 60K77

ILLINOIS FED. AID PROJECT