TYPICAL PAVEMENT MARKINGS

ARROW LAYOUT

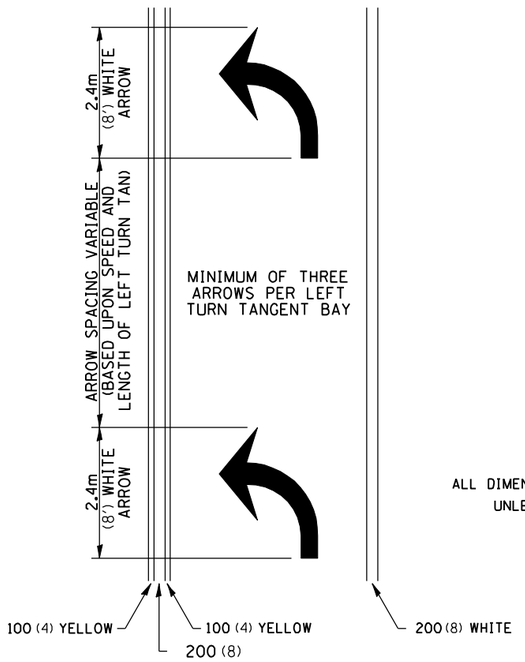

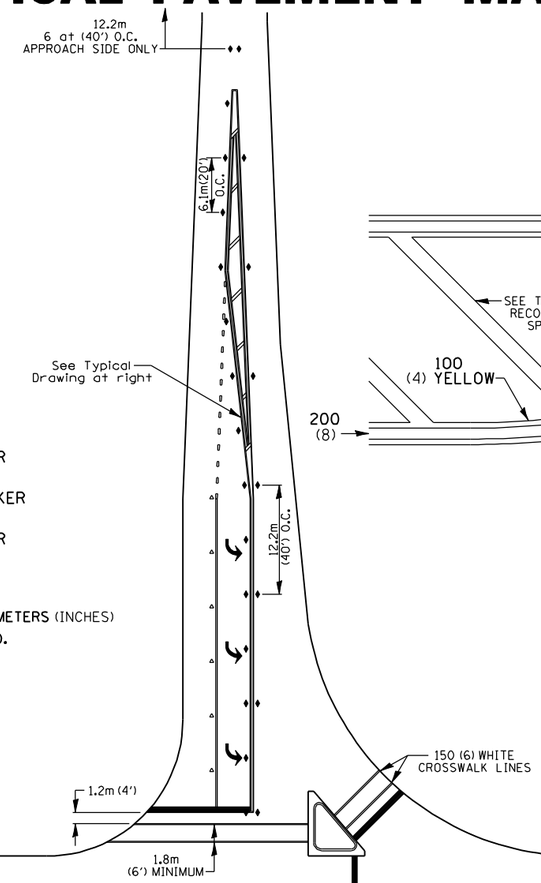

◀ ONE-WAY AMBER MARKER

◁ ONE-WAY CRYSTAL MARKER

◆ TWO-WAY AMBER MARKER

ALL DIMENSIONS ARE IN MILLIMETERS (INCHES) UNLESS OTHERWISE NOTED.

TYPICAL PAVEMENT MARKING FOR FLUSH MEDIAN

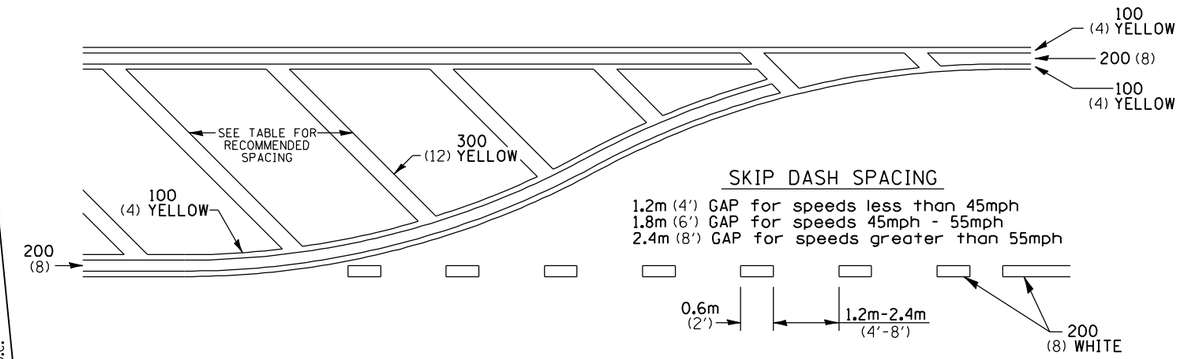

SKIP DASH SPACING

1.2m (4') GAP for speeds less than 45mph
1.8m (6') GAP for speeds 45mph - 55mph
2.4m (8') GAP for speeds greater than 55mph

RECOMMENDED SPACING BETWEEN DIAGONALS (IN FEET)

Speed Limit Range	Continuous Median Area	Intersection Channelization	Objects (Islands)
less than 50Km/H (30MPH)	15.3m (50')	4.53m (15')	3.05m (10')
50-60Km/H (30-40MPH)	22.9m (75')	6.1m (20')	4.53m (15')
70Km/H (45MPH) & over	22.9m (75')	9.05m (30')	6.1m (20')

NOTE: if the spacing recommended in the Table does not permit at least five diagonal lines in the area being marked, the spacing from the next lowest speed range should be used. The recommended spacing is measured parallel to the pavement center line.

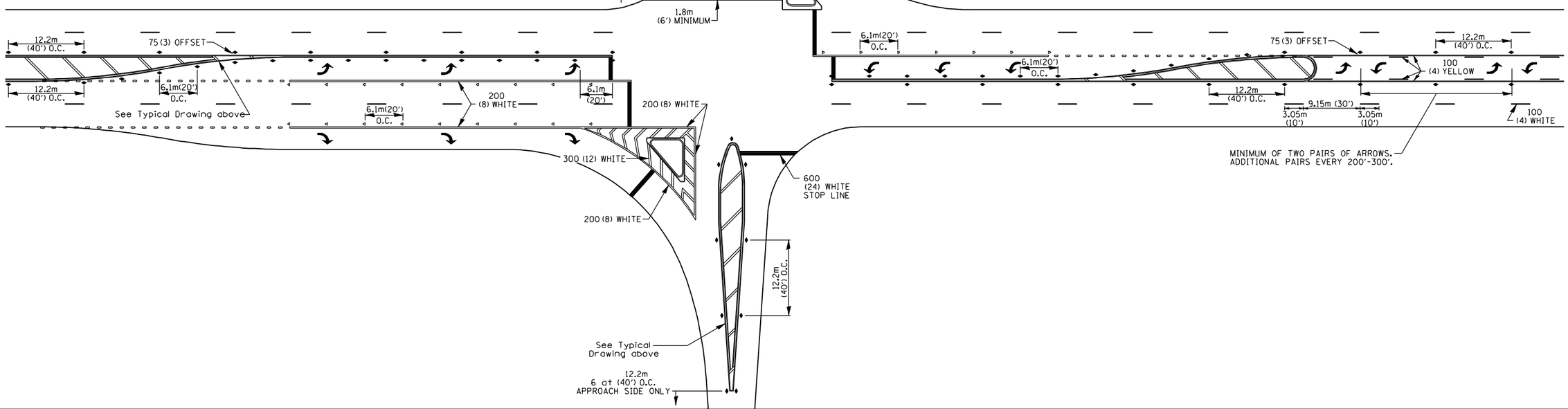

FILE NAME =	USER NAME = espina	DESIGNED -	REVISED - 4-4-11	STATE OF ILLINOIS DEPARTMENT OF TRANSPORTATION	REGION 2 / DISTRICT 2 STANDARD	F.A.P RTE.	SECTION	COUNTY	TOTAL SHEETS / SHEET NO.
n:\proj\0003393.00\contract.1\design\misc.sheets\D264B84-sht-District2Standards.dgn		DRAWN -	REVISED -			595	(142-1)R & 142-1HB	ROCK ISLAND	507 / 385
	PLOT SCALE = 40.0000 ' / IN.	CHECKED -	REVISED -					CONTRACT NO. 64B84	
	PLOT DATE = 3/11/2013	DATE -	REVISED -		SCALE: / SHEET NO. OF SHEETS / STA. TO STA.	FED. ROAD DIST. NO.	ILLINOIS	FED. AID PROJECT	