Notes:
Pour steps monolithically with cap.

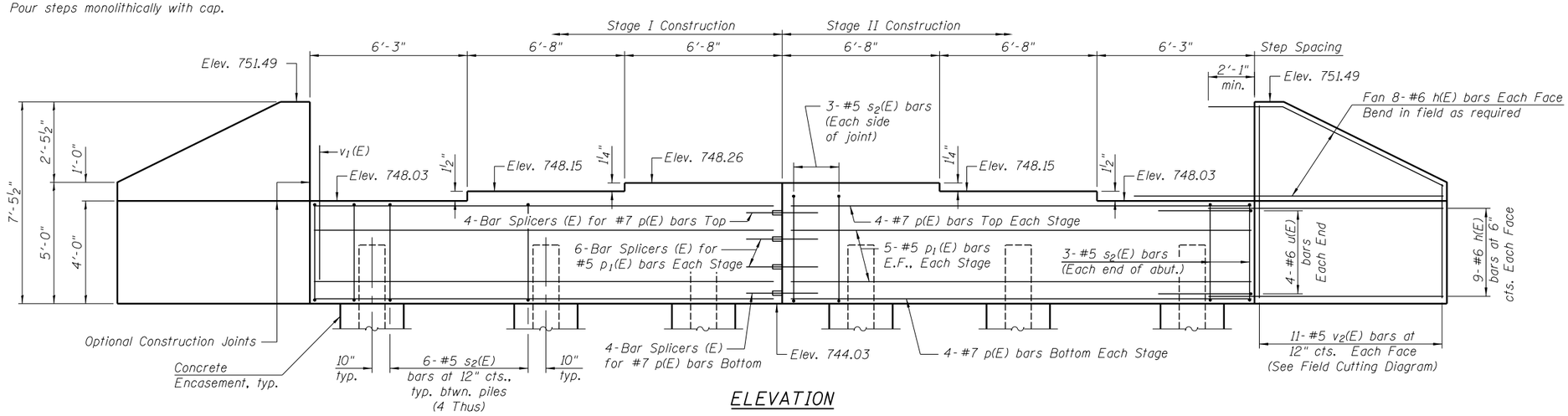

ELEVATION

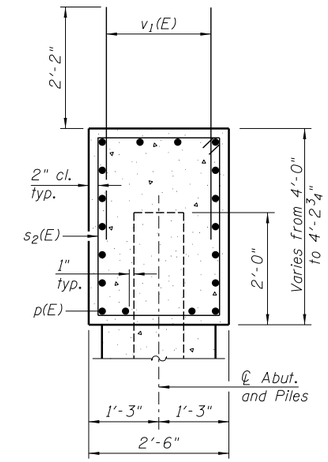

SEC. THRU ABUT.

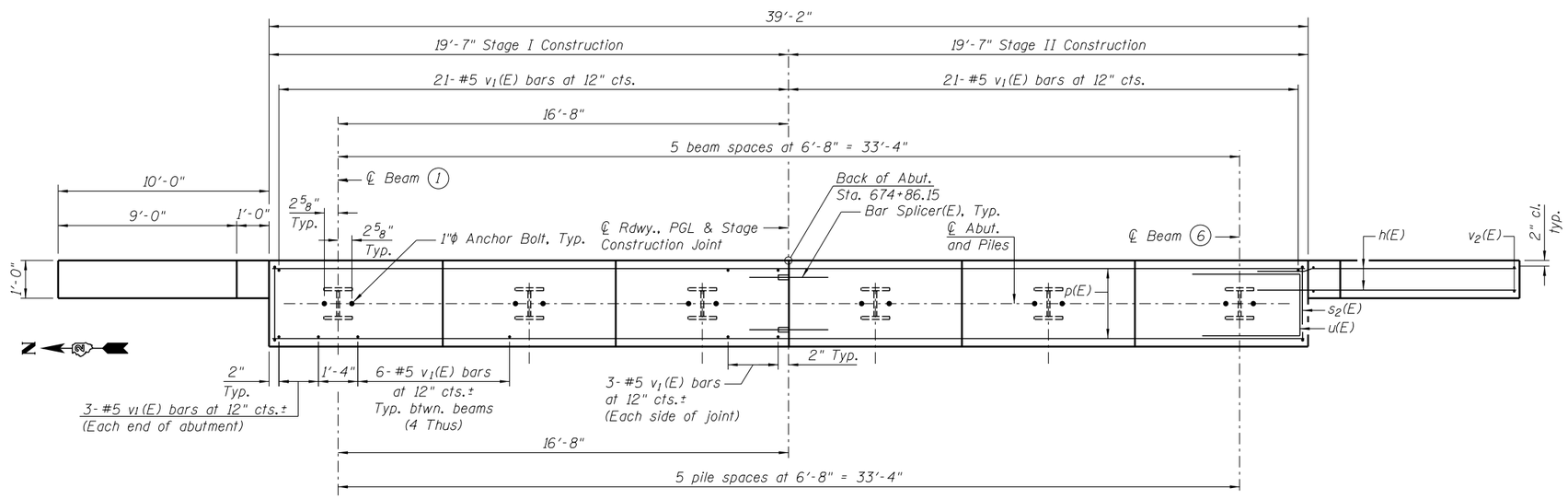

PLAN

BILL OF MATERIAL

Bar	No.	Size	Length	Shape
h(E)	68	#6	12'-0"	
p(E)	16	#7	19'-3"	
p1(E)	20	#5	19'-3"	
s2(E)	36	#5	12'-7"	
u(E)	8	#6	10'-11"	
v1(E)	78	#5	4'-4"	
v2(E)	22	#5	11'-9"	
Structure Excavation		Cu. Yd.	127	
Concrete Structures		Cu. Yd.	19.6	
Reinforcement Bars, Epoxy Coated		Pound	3,480	
Furnishing Steel Piles, HP12x53		Foot	195	
Test Pile Steel, HP12x53		Each	1	
Driving Piles		Foot	195	
Concrete Encasement		Cu. Yd.	2.0	
Pile Shoes		Each	6	

For details of Bar Splicers, see sheet SA-22 of SA-24.
For details of piles and Concrete Encasement, see sheet SA-23 of SA-24.
Space reinforcement in cap to miss anchor bolts.

PILE DATA

Type: Steel HP12x53 with Pile Shoes
Nominal Required Bearing: 419k
Factored Resistance Available: 230k
Est. Length: 39.0'
No. Production Piles: 5
No. Test Piles: 1

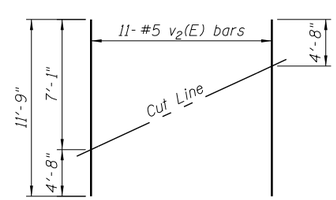

FIELD CUTTING DIAGRAM

Order v2(E) full length. Cut as shown and use remainder of bars in opposite face.

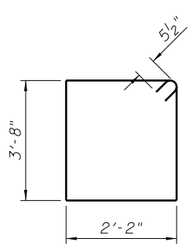

BAR s2(E)

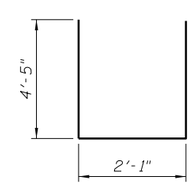

BAR u(E)

FILE NAME = ...\64D83-SN008000-49-019-EastAbut.dgn

ZROKA engineering — Zroka Engineering, P.C. 4216 North Hermitage Chicago, IL 60613	USER NAME = SAW	DESIGNED - JLA	REVISED -
		CHECKED - DAZ	REVISED -
	PLOT SCALE = 0:2.0000 ':' / in.	DRAWN - SAW	REVISED -
	PLOT DATE = 8/19/2013	CHECKED - JLA	REVISED -

STATE OF ILLINOIS
DEPARTMENT OF TRANSPORTATION

EAST ABUTMENT
S.N. 008-0049
SHEET NO. SA-19 OF SA-24 SHEETS

F.A.P. RTE.	SECTION	COUNTY	TOTAL SHEETS	SHEET NO.
17	4BR-5	CARROLL	150	58
		CONTRACT NO. 64D83		
		ILLINOIS FED. AID PROJECT		