Notes:
Pour steps monolithically with cap.

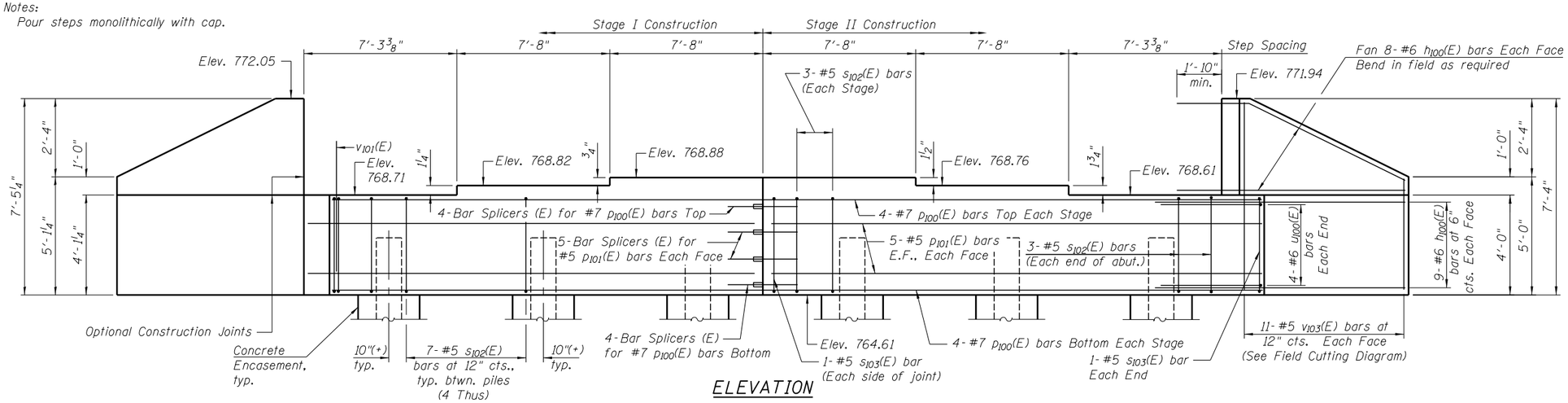

ELEVATION

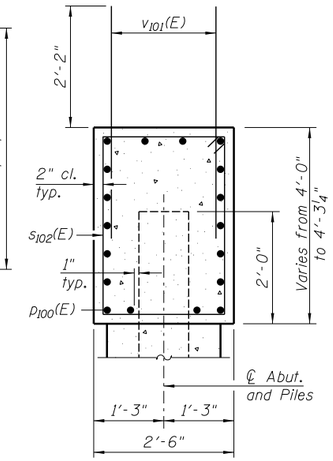

SEC. THRU ABUT.

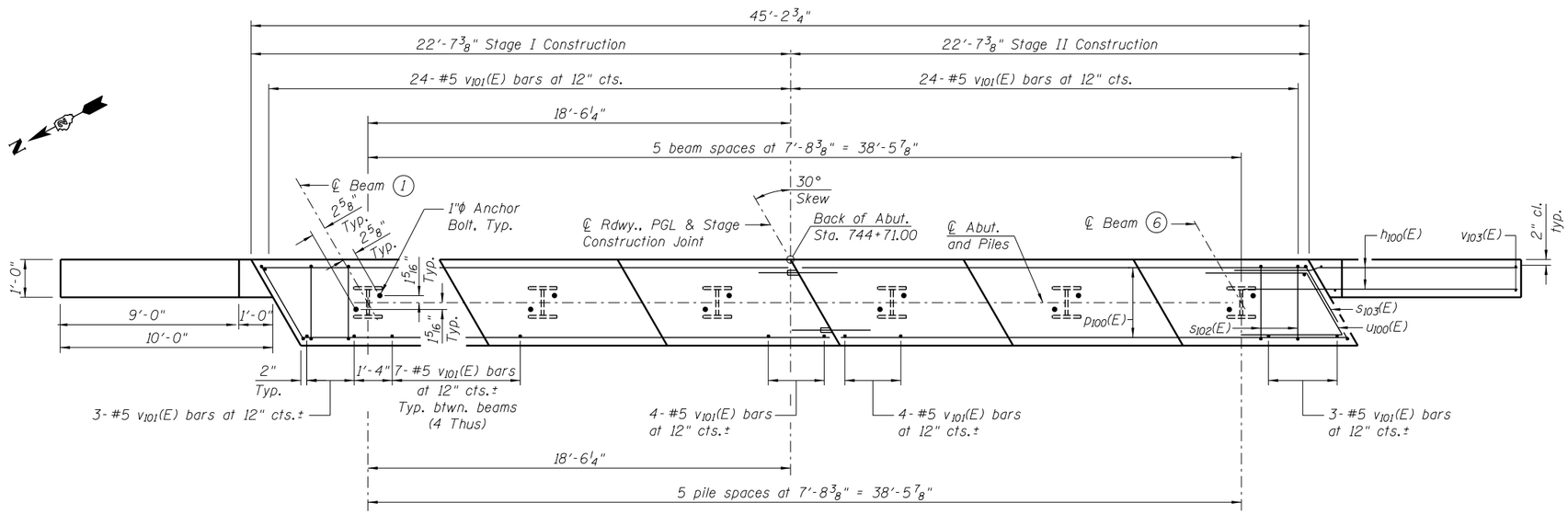

PLAN

BILL OF MATERIAL

Bar	No.	Size	Length	Shape
$h_{100}(E)$	68	#6	12'-0"	
$p_{100}(E)$	16	#7	22'-3"	
$p_{101}(E)$	20	#5	22'-3"	
$s_{102}(E)$	40	#5	12'-7"	
$s_{103}(E)$	4	#5	13'-3"	
$u_{100}(E)$	8	#6	11'-3"	
$v_{101}(E)$	90	#5	4'-4"	
$v_{102}(E)$	22	#5	11'-8"	
Structure Excavation		Cu. Yd.	111	
Concrete Structures		Cu. Yd.	21.4	
Reinforcement Bars, Epoxy Coated		Pound	3,810	
Furnishing Steel Piles, HP10x42		Foot	200	
Test Pile Steel, HP10x42		Each	1	
Driving Piles		Foot	200	
Concrete Encasement		Cu. Yd.	2.0	
Pile Shoes		Each	6	

For details of Bar Splicers, see sheet SB-22 of SB-24.
For details of piles and Concrete Encasement, see sheet SB-23 of SB-24.
Space reinforcement in cap to miss anchor bolts.

PILE DATA

Type: Steel HP10x42 with Pile Shoes
Nominal Required Bearing: 335k
Factored Resistance Available: 184k
Est. Length: 40.0'
No. Production Piles: 5
No. Test Piles: 1

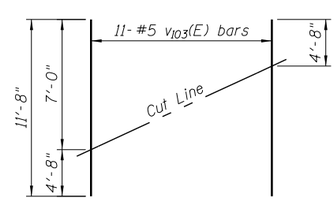

FIELD CUTTING DIAGRAM

Order $v_{103}(E)$ full length. Cut as shown and use remainder of bars in opposite face.

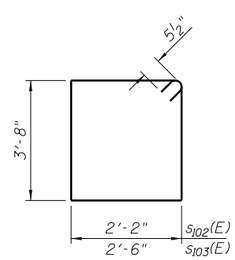

BAR $s_{102}(E)$ & $s_{103}(E)$

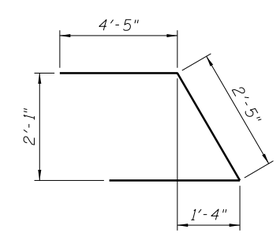

BAR $u_{100}(E)$

FILE NAME = ...\64D83-SN0080050-019-EastAbut.dgn

ZROKA engineering — Zroka Engineering, P.C. 4216 North Hermitage Chicago, IL 60613	USER NAME = SAW	DESIGNED - LAS	REVISED -
		CHECKED - JLA	REVISED -
	PLOT SCALE = 0:2.0000 ':' / in.	DRAWN - SAW	REVISED -
	PLOT DATE = 8/19/2013	CHECKED - LAS	REVISED -

STATE OF ILLINOIS
DEPARTMENT OF TRANSPORTATION

EAST ABUTMENT
S.N. 008-0050
SHEET NO. SB-19 OF SB-24 SHEETS

F.A.P. RTE.	SECTION	COUNTY	TOTAL SHEETS	SHEET NO.
17	4BR-6	CARROLL	150	82
		CONTRACT NO. 64D83		
		ILLINOIS FED. AID PROJECT		