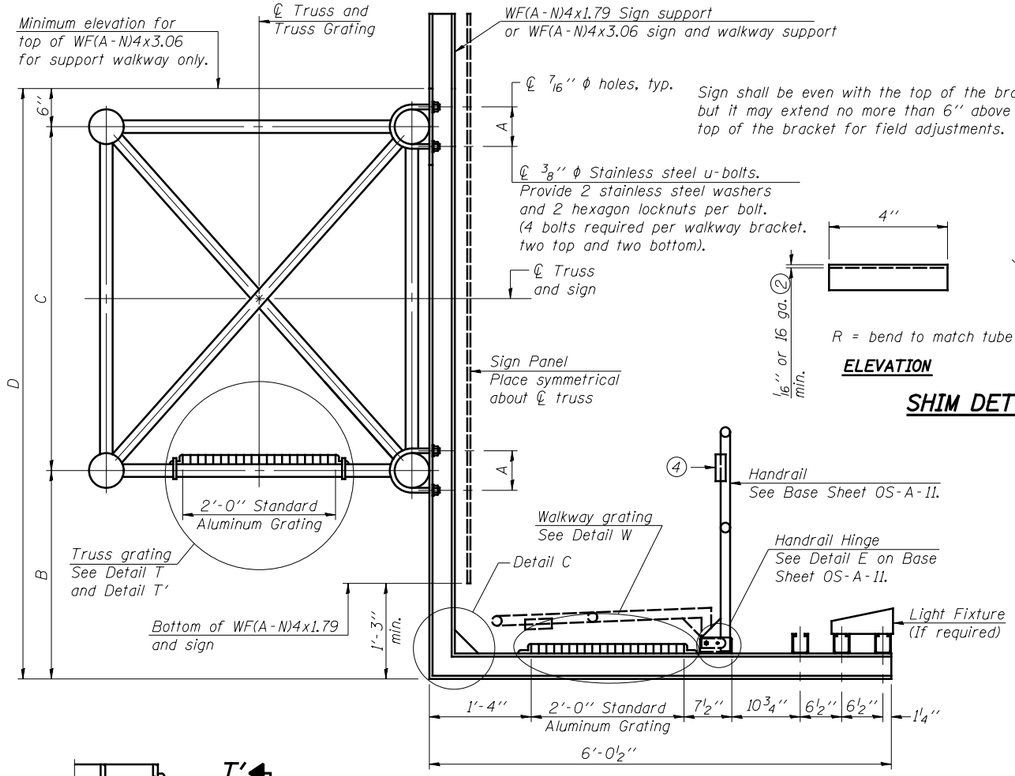

SECTION B-B

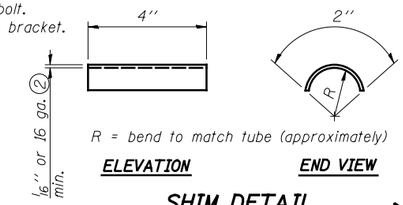

SHIM DETAIL

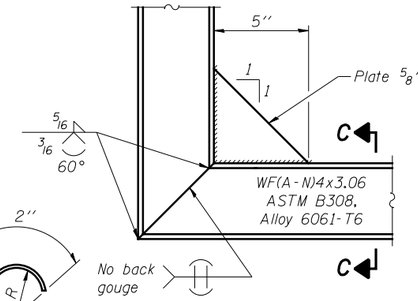

DETAIL C

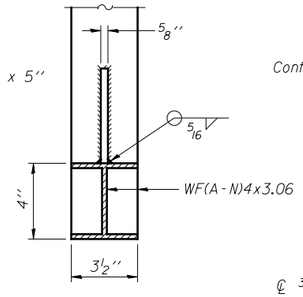

SECTION C-C

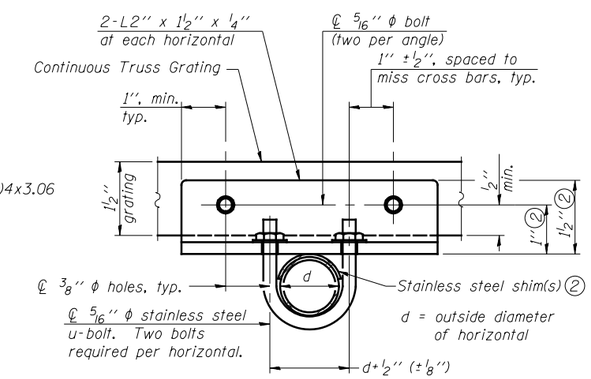

SECTION T-T

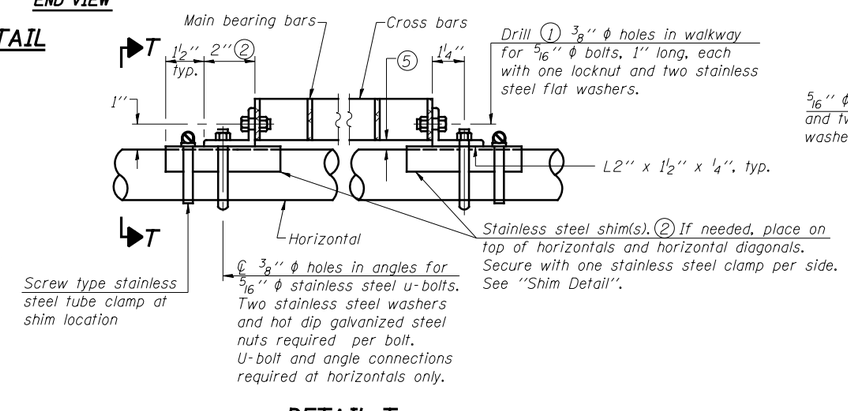

DETAIL T

(Continuous Truss grating)

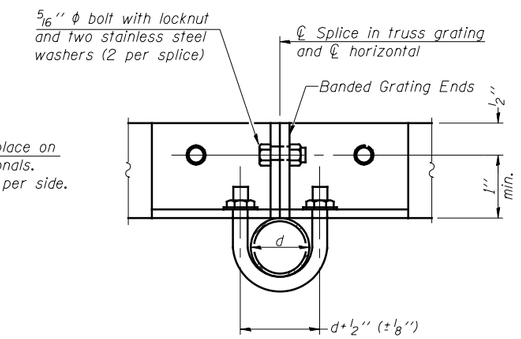

SECTION T'-T'

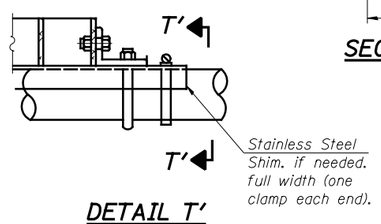

DETAIL T'

(Truss grating splice)
Details not shown same as Detail T.
Alternate materials may be used subject to the Engineer's review and approval.

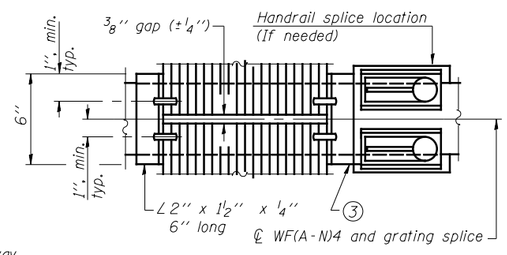

(AT WALKWAY GRATING SPLICE)

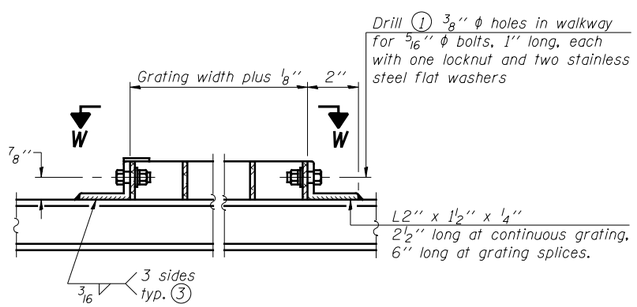

DETAIL W

(Walkway grating)

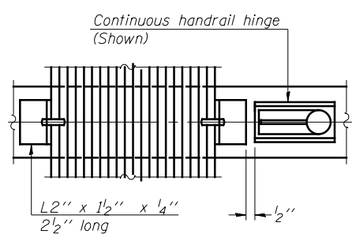

(CONTINUOUS WALKWAY GRATING)

SECTION W-W

SPECIFICATIONS FOR STANDARD ALUMINUM GRATING

Main Bearing Bars shall be 3/16'' x 1½'' on 1 3/16'' centers and conform to ASTM B221 Alloy 6061-T6.

Cross bars shall be 3/16'' x 1½'' on 4'' centers and conform to ASTM B221 Alloy 6063-T5 or 6061-T6.

OR

Aluminum Grating with modified "t" sections for main bearing bars shall meet the following requirements:

Main bars shall conform to ASTM B221 Alloy 6061-T6 and have a minimum section modulus equal to 0.0705 in.^{3} per bar, a depth of 1½'', spaced on 1 3/16'' centers.

Cross bars shall conform to ASTM B221 Alloy 6063-T5 or T-42 and spaced on 4'' centers.

Structure Number	Station	A	⑥ B	C	⑥ D
7S025I057R162.0	2290+50	5½"	6'-6"	4'-6"	11'-6"
7S025I057R162.7	2326+30	5½"	4'-9"	4'-6"	9'-9"
7S025I057R163.4	2351+00	5½"	4'-0"	4'-6"	9'-0"
7S025I070L098.6	2387+00	5½"	4'-6"	4'-6"	9'-6"
7S025I070L099.1	2412+00	5½"	4'-9"	4'-6"	9'-9"

① Drilling holes in grating may be done in shop or field, based on Contractor's preference and subject to accurate alignment.

② Stainless steel shims shall be placed as shown in Detail T <u>if needed</u> to compensate for alignment variations between horizontal and diagonal pipes beyond adjustment provided by angles. Thicker shims may be used subject to shims performing properly.

③ If Handrail Joint present, weld angle to WF(A-N)4 and ¼'' extension bars. (See Base Sheet OS-A-11.)

④ PL ⅛'' x ½'' x 2'' welded to handrail posts to protect locations that contact grating.

⑤ Tube to grating gap may vary from 0 to ½'', max. to align walkway, allow for camber, etc.

⑥ Based on actual height of tallest sign given on OS-A-1.

OS-A-10 6-1-12

FILE NAME =	USER NAME =	DESIGNED - ESW	REVISED -
		CHECKED - JWS	REVISED -
	PLOT SCALE =	DRAWN - PDB	REVISED -
	PLOT DATE =	CHECKED - BRM	REVISED -

STATE OF ILLINOIS
DEPARTMENT OF TRANSPORTATION

OVERHEAD SIGN STRUCTURES
ALUMINUM WALKWAY DETAILS

SHEET NO. 32 OF 53 SHEETS

F.A.I RTE.	SECTION	COUNTY	TOTAL SHEETS	SHEET NO.
57/70	(25-4)R	EFFINGHAM	1760	419

CONTRACT NO. 74295

ILLINOIS FED. AID PROJECT