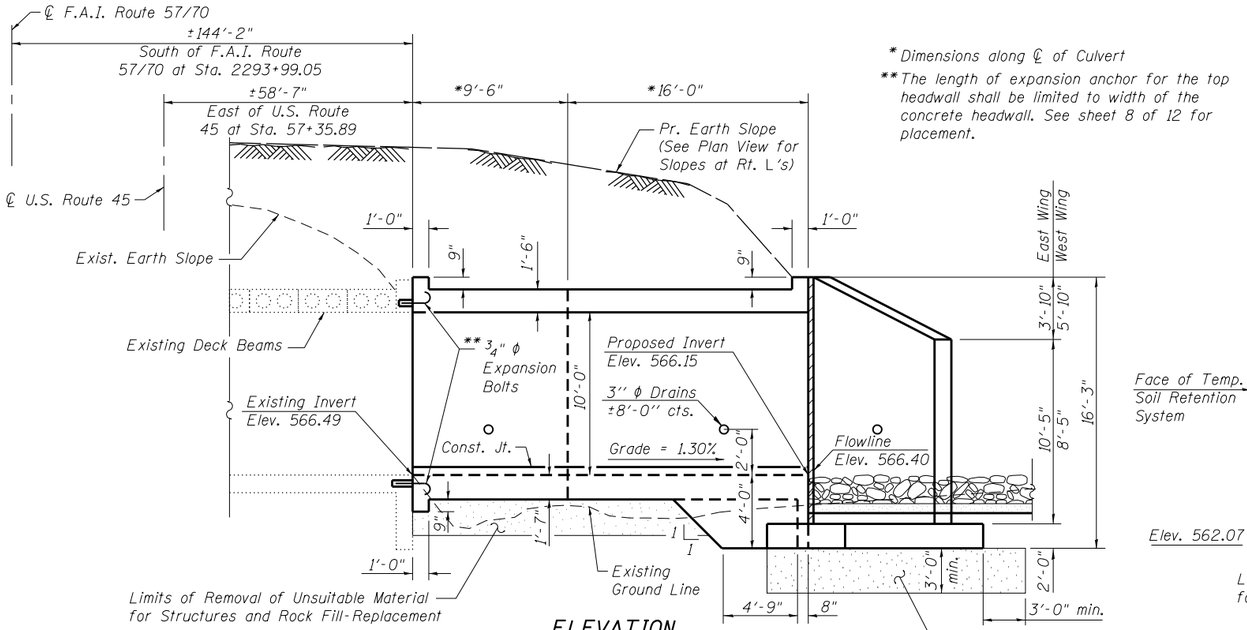

* Dimensions along ℄ of Culvert

** The length of expansion anchor for the top headwall shall be limited to width of the concrete headwall. See sheet 8 of 12 for placement.

ELEVATION

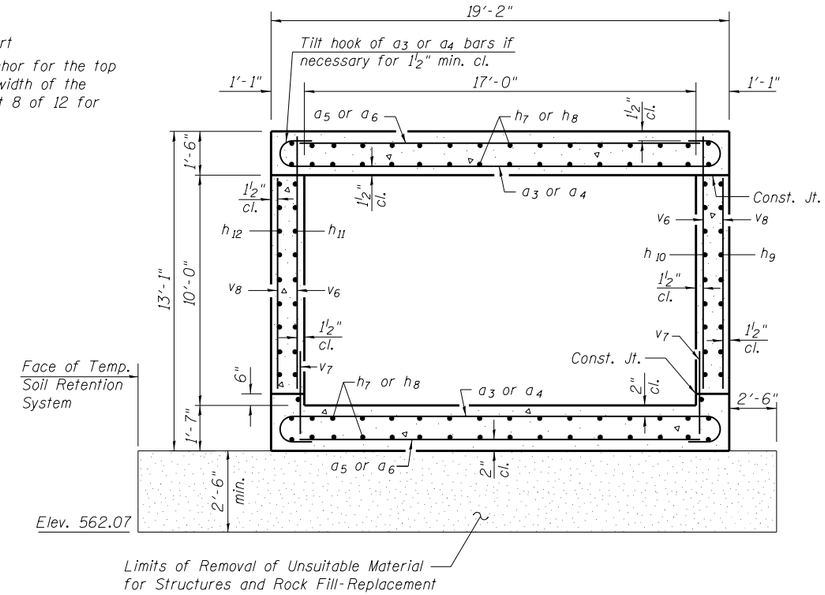

SECTION THRU BARREL

(Looking upstream)
Max. Soil Pressure
Under Barrel = 2640 psf

SOUTH EXTENSION BILL OF MATERIAL

Bar	No.	Size	Length	Shape
a_3	100	#9	21'-4"	
a_4	42	#9	22'-0"	
a_5	29	#4	18'-10"	
a_6	10	#4	19'-6"	
b	112	#6	4'-0"	
d	32	#4	5'-6"	
h_7	56	#6	18'-8"	
h_8	56	#6	31'-8"	
h_9	11	#4	20'-1"	
h_{10}	11	#6	20'-6"	
h_{11}	11	#6	29'-9"	
h_{12}	11	#4	30'-3"	
h_{13}	15	#6	18'-10"	
h_{14}	20	#4	13'-8"	
h_{15}	6	#4	14'-2"	
h_{16}	16	#4	10'-5"	
h_{17}	10	#4	11'-10"	
n_1(E)	52	#8	9'-7"	
s_2	40	#4	6'-3"	
s_3	20	#4	6'-5"	
t_3	25	#5	8'-3"	
t_4	29	#4	8'-3"	
t_5	17	#5	9'-8"	
t_6	19	#7	9'-8"	
v_6	80	#9	10'-8"	
v_7	80	#9	6'-8"	
v_8	29	#5	9'-2"	
v_9	4	#9	11'-5"	
v_{10}	4	#9	9'-1"	
v_{11}	18	#4	24'-0"	
v_{12}	13	#4	21'-11"	
w_2	14	#5	13'-8"	
w_3	16	#5	10'-5"	
Removal and Disposal of Unsuitable Material for Structures		Cu. Yd.	121.7	
Concrete Removal		Cu. Yd.	51.4	
Rock Fill-Replacement		Ton	95.2	
Reinforcement Bars		Pound	25270	
Reinforcement Bars, Epoxy Coated		Pound	1340	
Expansion Bolts 3/4 Inch		Each	30	
Concrete Box Culverts		Cu. Yd.	117.2	
Rock Fill-Foundation		Ton	69.2	

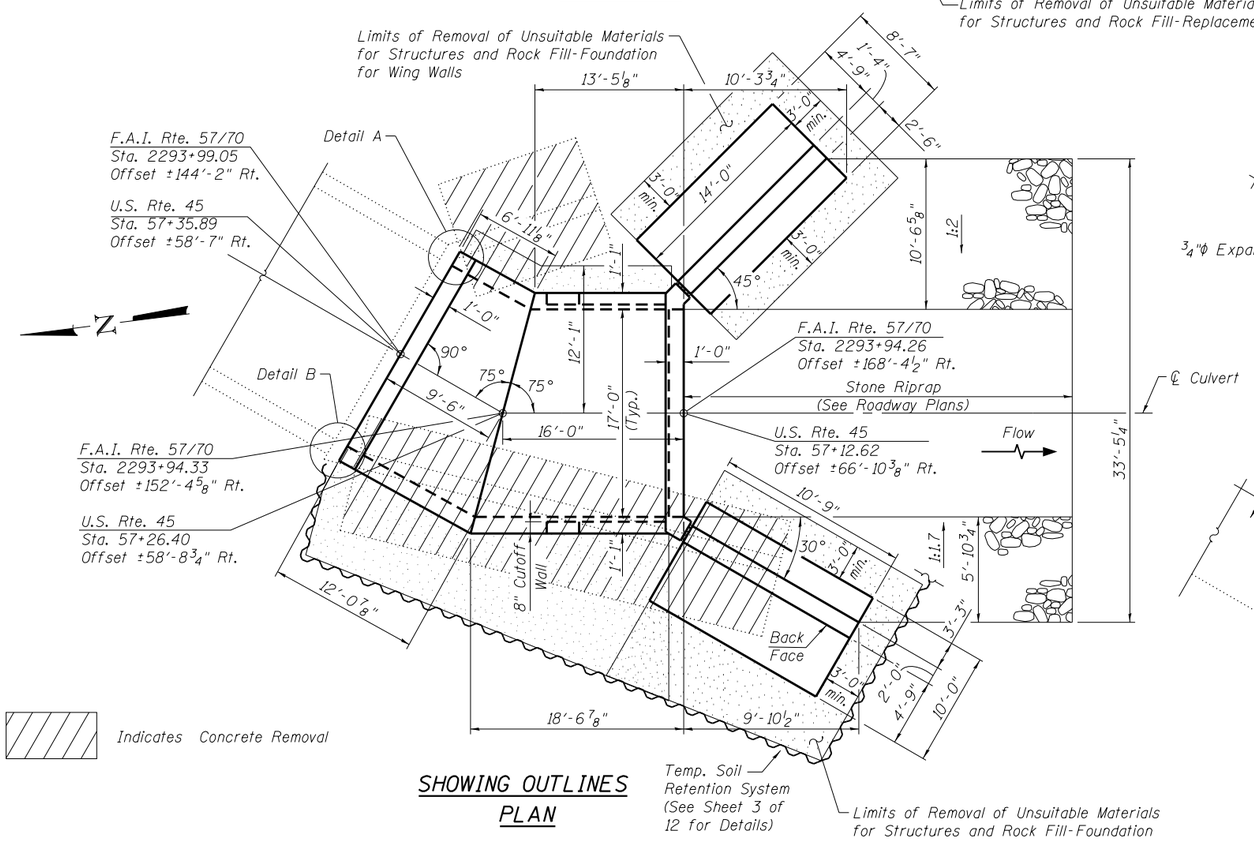

Indicates Concrete Removal

SHOWING OUTLINES PLAN

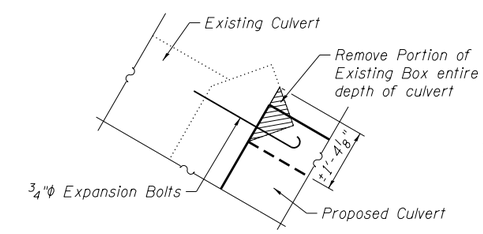

DETAIL A

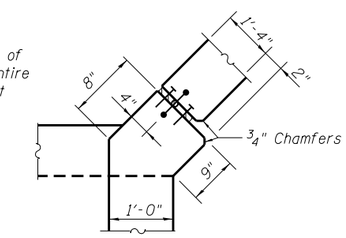

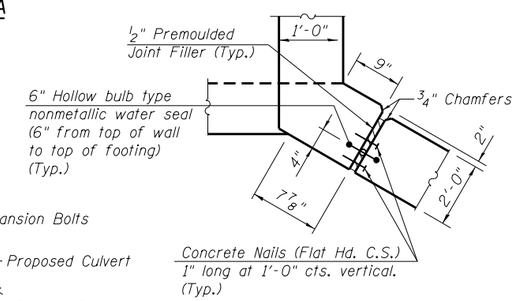

CORNER DETAILS

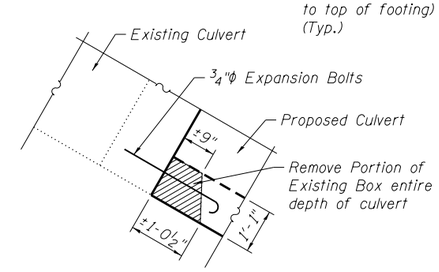

DETAIL B

Notes:

Remove existing unsuitable material under the culvert as shown and replace with one foot of crushed limestone above one and one half feet of rock fill. Rock fill depth may increase during construction.

See sheet 3 of 12 for Temporary Soil Retention Details & Concrete Removal Details.

S:\Projects\403-00012_57-70\Bridges\Bridge 025-8648 Y shaped culvert under US 45\DGN\Final Design CAD Drawings\0258648-74295-006-S Ext Dtls 01.dgn

FILE NAME = 0258648-74295-006-S Ext Dtls	USER NAME =	DESIGNED - ACS	REVISED -	STATE OF ILLINOIS DEPARTMENT OF TRANSPORTATION
BERNARDIN • LOCHMUELLER & ASSOCIATES, INC. 3 OAK DRIVE MARYVILLE, ILLINOIS 62062 PHONE (618) 288-4665 FAX (618) 288-4666	Illinois Design Firm Number 184.001670	CHECKED - BB	REVISED -	
	PLOT SCALE =	DRAWN - WJS	REVISED -	
	PLOT DATE = 2:54:30 PM 5/1/2013	CHECKED - CJF	REVISED -	

SOUTH EXTENSION DETAILS
STRUCTURE NO. 025-8648

SHEET NO. 6 OF 12 SHEETS

F.A.I. RTE.	SECTION	COUNTY	TOTAL SHEETS	SHEET NO.
57/70	(25-4HVB-1)BY	EFFINGHAM	1760	525
		CONTRACT NO. 74295		
		ILLINOIS FED. AID PROJECT		