Notes:
The Contractor Shall be reimbursed only one time for the Installation and Removal of Protective Shield.
* Indicates Slab Thickness before Grinding.
Indicates Removal of Existing Structures

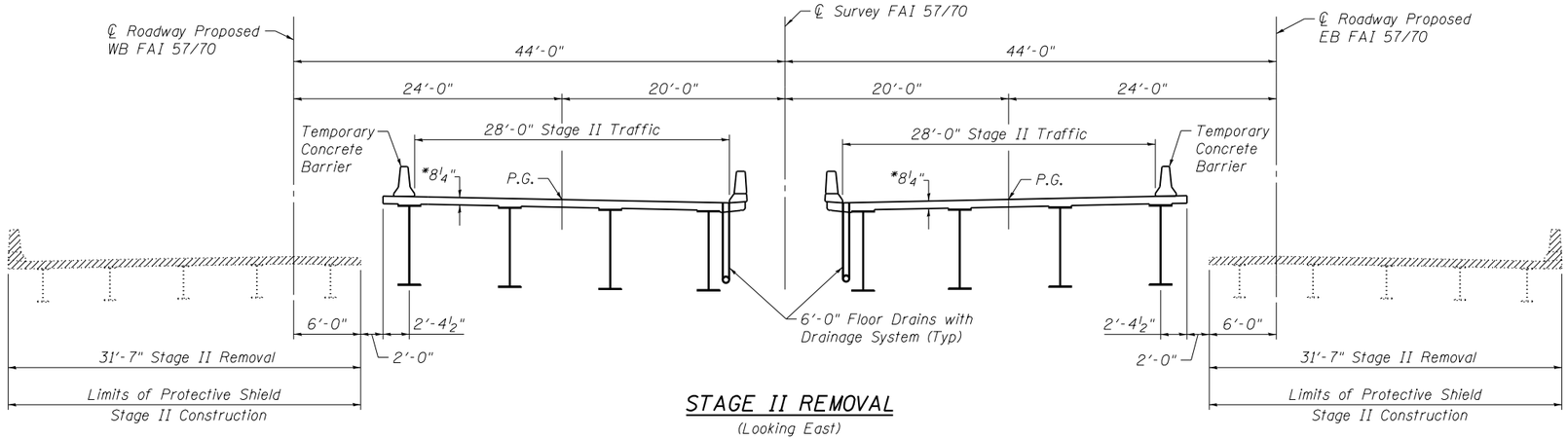

STAGE II REMOVAL
(Looking East)

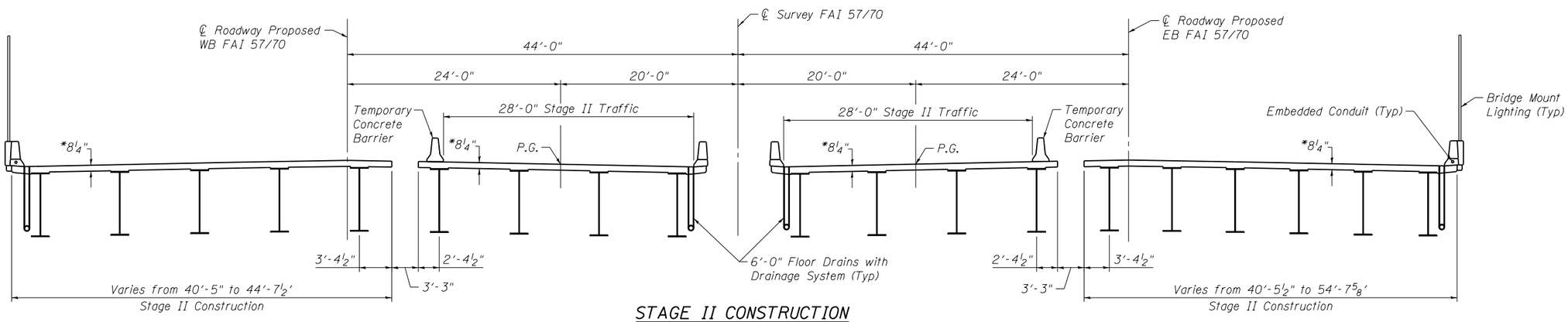

STAGE II CONSTRUCTION
(Looking East)

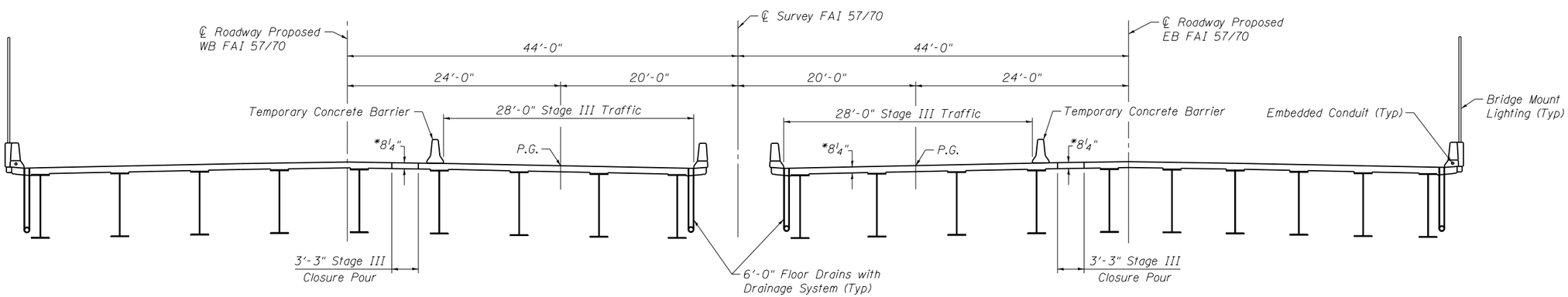

STAGE III CONSTRUCTION
(Looking East)

FILE NAME = 0250III-74295-004B-Stage II & III Const.dgn	USER NAME = Design = bbovee	DESIGNED - BB	REVISED	STATE OF ILLINOIS DEPARTMENT OF TRANSPORTATION
BERNARDIN · LOCHMUELLER & ASSOCIATES, INC. 3 OAK DRIVE MARYVILLE, ILLINOIS 62062 PHONE (618) 288-4665 FAX (618) 288-4666	Illinois Design Firm Number 184.001670	CHECKED - ACS	REVISED	
	PLOT SCALE =	DRAWN - WJS	REVISED	
	PLOT DATE = 3:25:18 PM 8/14/2013	CHECKED - CJF	REVISED	

STAGE II & III CONSTRUCTION DETAILS
STRUCTURE NO. 025-0111 (WB) & 025-0112 (EB)
SHEET NO. 4B OF 79 SHEETS

F.A.I. RTE.	SECTION	COUNTY	TOTAL SHEETS	SHEET NO.
57/70	(25-4HVB-1)BY	EFFINGHAM	1760	539B
		CONTRACT NO. 74295		
	ILLINOIS FED. AID PROJECT			