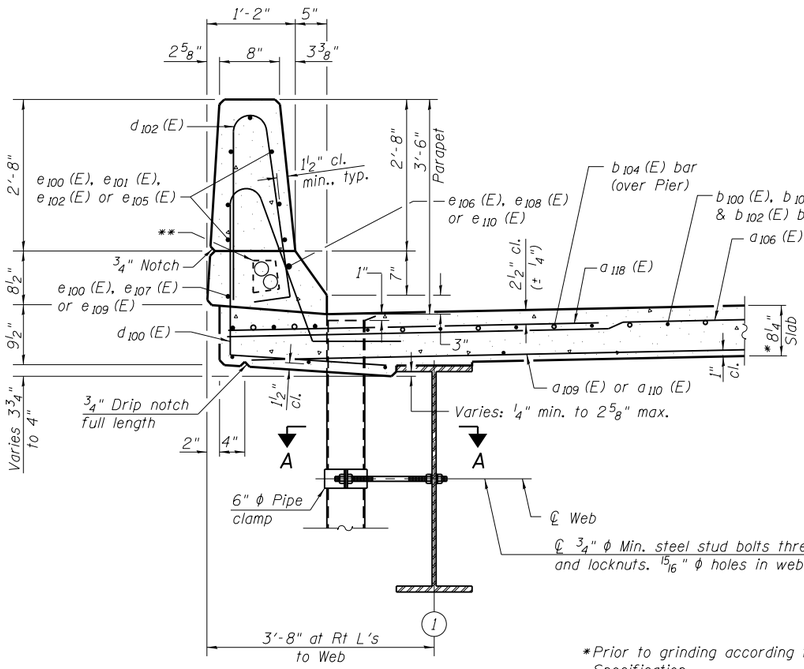

SECTION THRU NORTH PARAPET

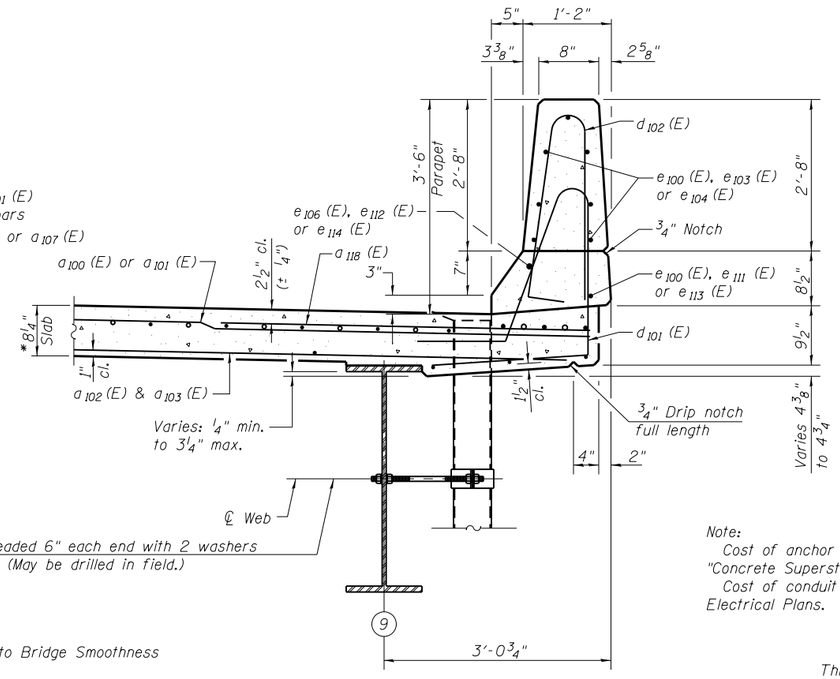

SECTION THRU SOUTH PARAPET

*Prior to grinding according to Bridge Smoothness Specification

** 2" PVC Conduit embedded in structure. Maintain 1 1/2" clear from reinforcement

Note:
Cost of anchor rods are included with "Concrete Superstructure".
Cost of conduit is included in the Electrical Plans.

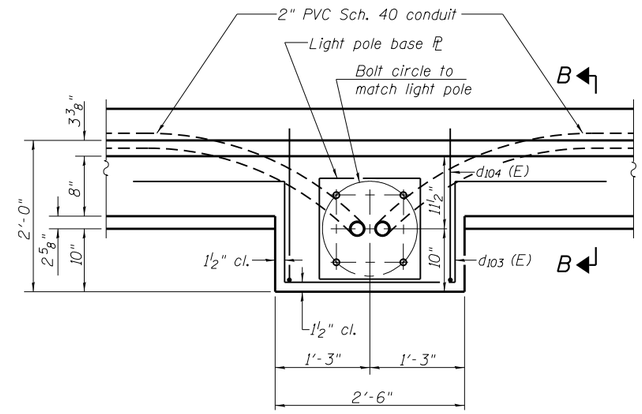

PLAN

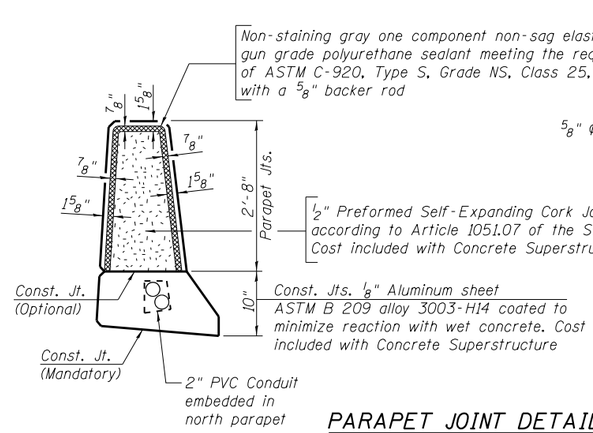

PARAPET JOINT DETAILS

Notes:
The exterior surfaces of the floor drains shall be painted with the finish coat as specified according to Section 506 of the Standard Specification.
Fiberglass pipe shall conform to ASTM D 2996, with short-time rupture strength hoop tensile stress of 30,000 p.s.i. minimum.
Galvanize clamping device according to AASHTO M232. Cost of clamping device and inserts is included with Floor Drains.
Set top of pipe drain 1/4" min. below top of finished deck prior to Diamond Grinding and Surface Testing Bridge Sections Special Provisions. The remaining 1/4" deck around the drains shall be sloped and formed to drain. See Top Plan View.
See sheet 26 of 79 for Drainage System Details.
Anchor Rod Diameter as specified for light poles (ASTM F 1554 Grade 105). Full length hot dipped galvanized.
Drains shall be located to clear all crossframes and splices.

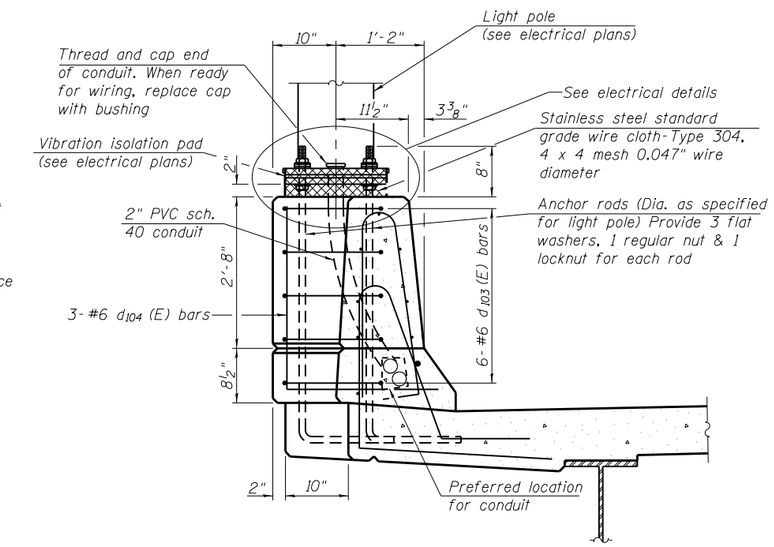

SECTION B-B

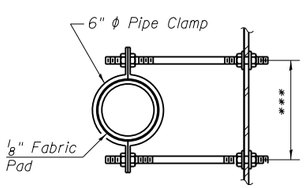

SECTION A-A

*** Dimension as required by Pipe Clamp

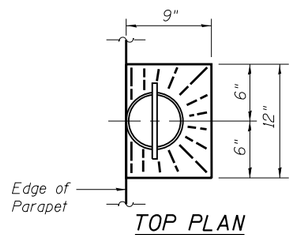

TOP PLAN

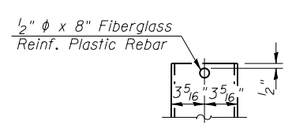

FIBERGLASS PIPE

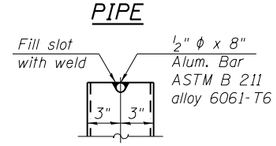

ALUMINUM TUBE

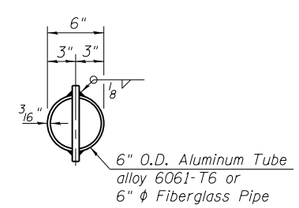

TOP PLAN

(Showing Aluminum Tube)

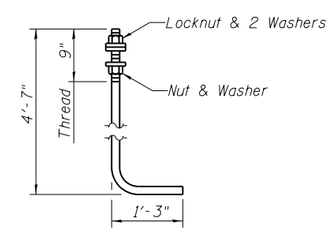

ANCHOR ROD

FILE NAME = 0250III-74295-024-Superstruc Details.dgn	USER NAME = bbovee	DESIGNED - BB	REVISED
BERNARDIN · LOCHMUELLER & ASSOCIATES, INC. 3 OAK DRIVE MARYVILLE, ILLINOIS 62062 PHONE (618) 288-4666 FAX (618) 288-4666	Illinois Design Firm Number 184.001670	CHECKED - ACS	REVISED
	PLOT SCALE =	DRAWN - WJS	REVISED
	PLOT DATE = 3:25:39 PM 8/14/2013	CHECKED - CJF	REVISED

STATE OF ILLINOIS
DEPARTMENT OF TRANSPORTATION

SUPERSTRUCTURE DETAILS (WB)
STRUCTURE NO. 025-0111

SHEET NO. 24 OF 79 SHEETS

F.A.I. RTE.	SECTION	COUNTY	TOTAL SHEETS	SHEET NO.
57/70	(25-4HVB-1)BY	EFFINGHAM	1760	559
		CONTRACT NO. 74295		
	ILLINOIS FED. AID PROJECT			