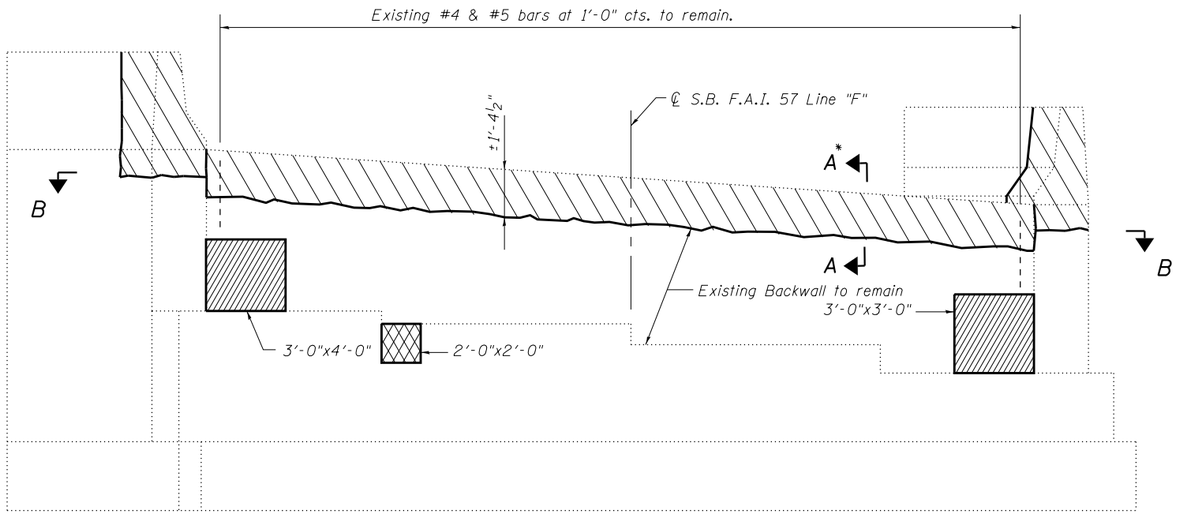

ELEVATION

Looking North

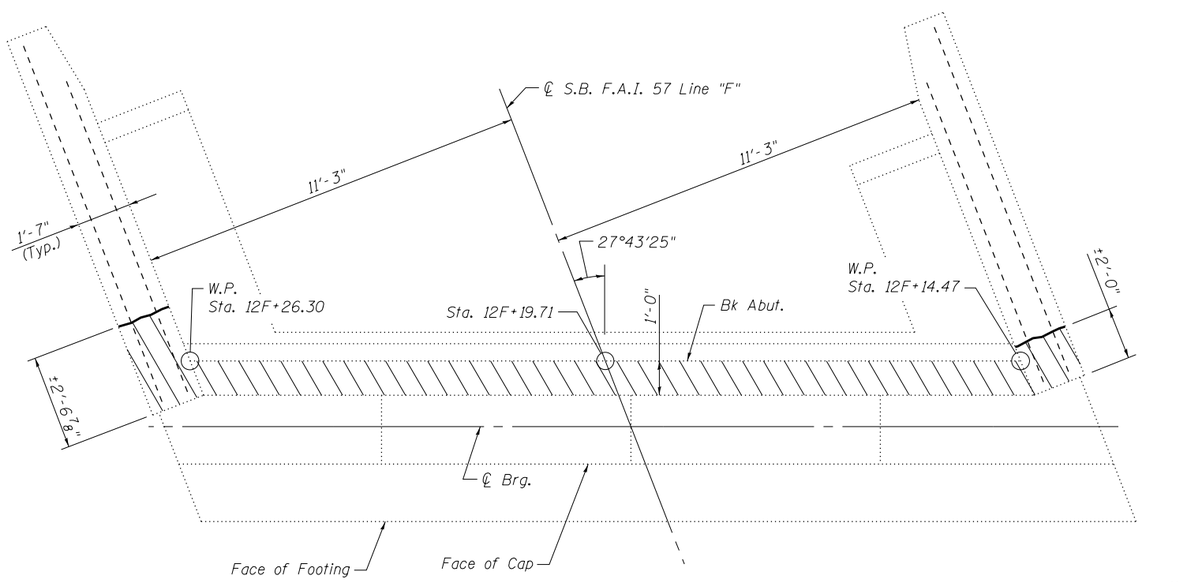

VIEW B-B
NORTH ABUTMENT

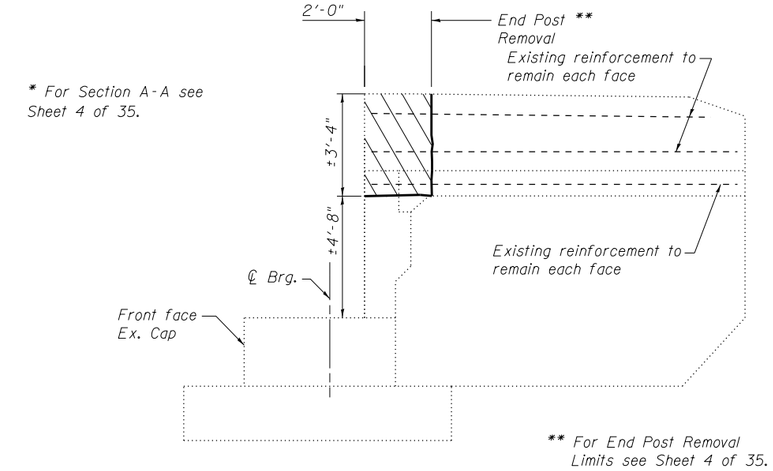

EAST WING WALL

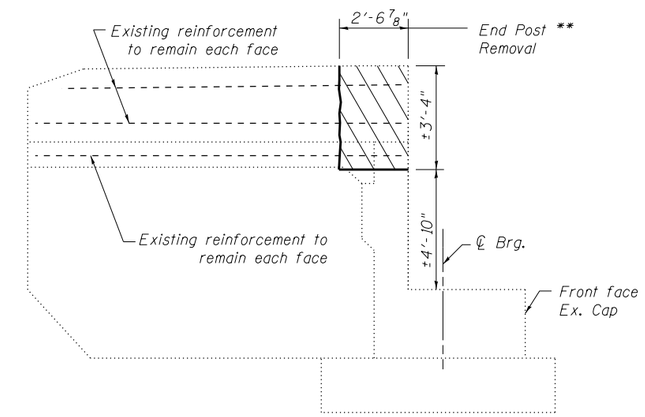

WEST WING WALL

LEGEND

- Indicates Structural Repair of Concrete
- Indicates Concrete Removal
- Indicates Concrete Removal (Special)

Notes:
The quantities shown are for estimating purposes only. The area to be repaired will be determined by the Engineer at the time of construction. Actual repair locations shall be shown on As-built plans.

BILL OF MATERIAL

Item	Unit	Total
Concrete Removal	Cu. Yd.	2.1
Structural Repair of Concrete (Depth equal to or less than 5")	Sq. Ft.	21
Concrete Removal (Special)	Sq. Yd.	0.5