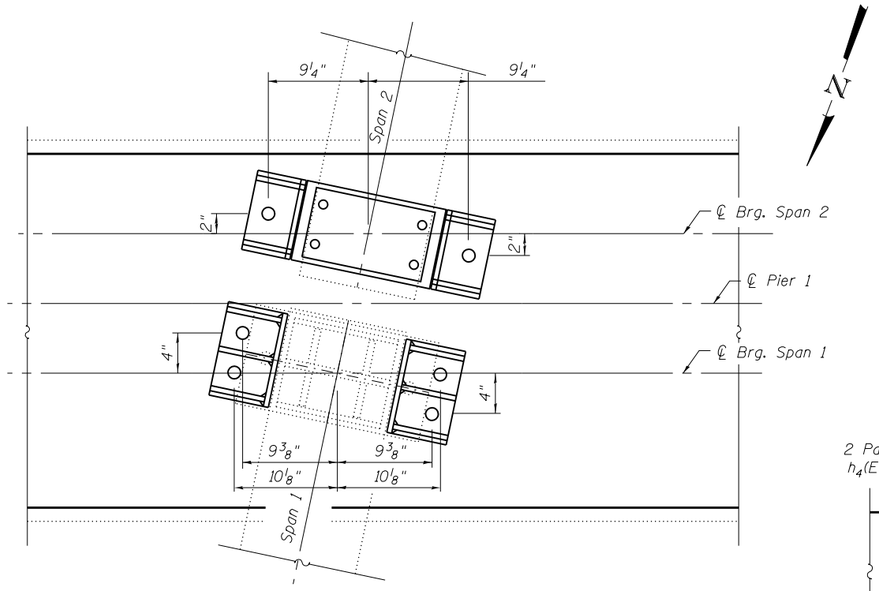

DETAIL A

(Showing Side Retainer & Anchor Bolt Layout)

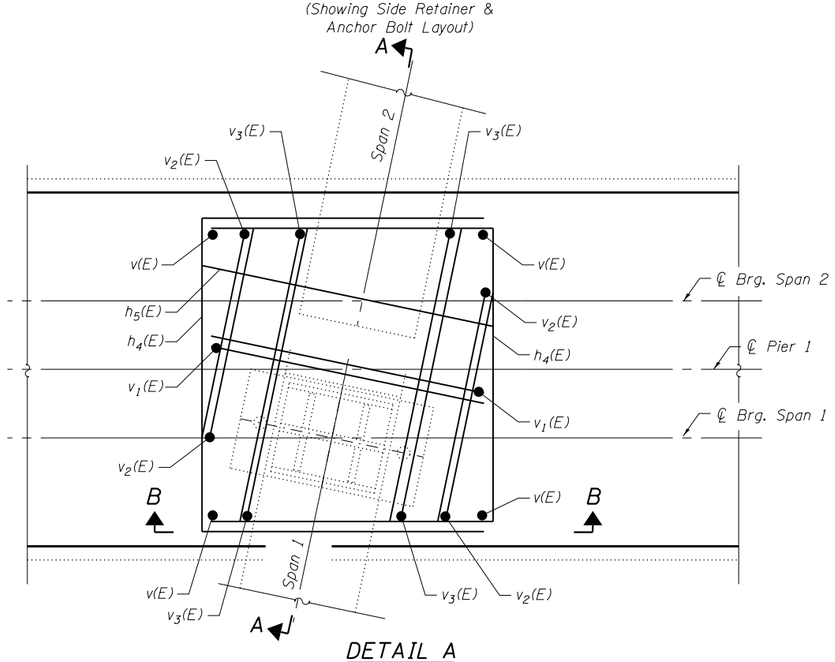

DETAIL A

(Showing Reinforcement)
(All reinforcment shown is #5 bars.)

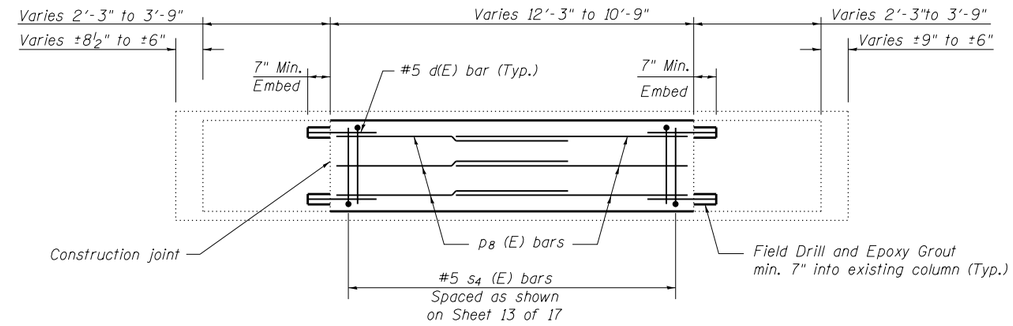

CRASHWALL PLAN
PIER 1

VIEW B-B

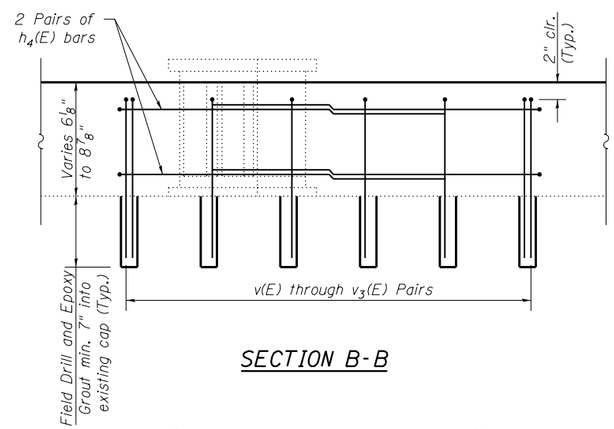

SECTION B-B

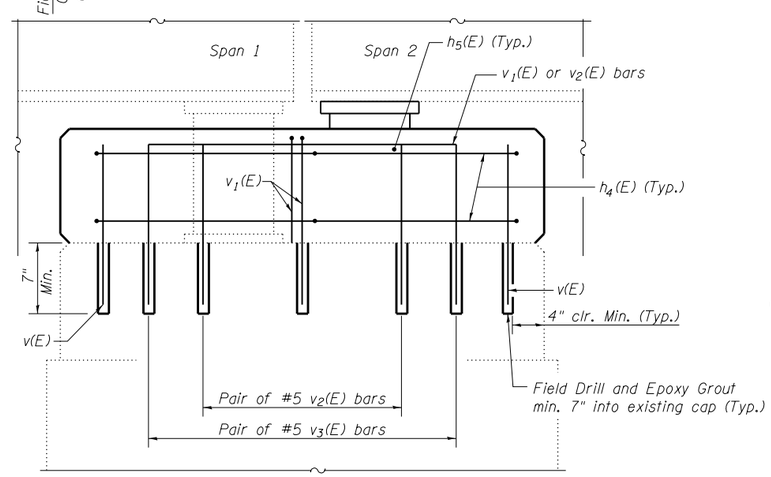

SECTION A-A

(All v(E) bars shown are drilled and grouted)
Side Retainers not shown for clarity.

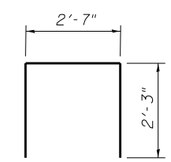

h4(E) BARS

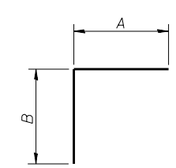

v(E) & s(E) BARS

Bar	A	B
v1(E)	2'-3"	1'-1"
v2(E)	1'-10"	1'-1"
v3(E)	2'-6"	1'-1"
s3(E)	2'-7"	1'-1"
s4(E)	2'-5"	3'-5"

Notes:
Bars shall be drilled and grouted according to Section 584 of the Standard Specifications.
Concrete Sealer shall be applied only to exposed surfaces of the new concrete on Pier 1.

PIER 1
BILL OF MATERIAL

Bar	No.	Size	Length	Shape
d(E)	18	#5	3'-3"	—
h4(E)	20	#5	7'-1"	⊓
h5(E)	5	#5	2'-3"	—
p4(E)	6	#5	6'-4"	—
p5(E)	4	#5	4'-0"	—
p6(E)	3	#5	9'-6"	—
p7(E)	3	#5	6'-6"	—
p8(E)	18	#5	7'-2"	—
s3(E)	52	#5	3'-8"	⌐
s4(E)	26	#5	5'-10"	⌐
v(E)	20	#5	1'-1"	—
v1(E)	10	#5	3'-4"	⌐
v2(E)	20	#5	2'-11"	⌐
v3(E)	20	#5	3'-7"	⌐
Concrete Sealer			Sq. Ft.	240
Concrete Structures			Cu. Yd.	5.8
Reinforcement Bars, Epoxy Coated			Pound	1020

S:\Projects\403-00072_57-70\Bridges\Bridge 025-0062 TR over 57-70\DGN\Final CADD Design Plans\0250062-74295-016.dgn

FILE NAME = 0250062-74295-016.dgn	USER NAME =	DESIGNED - B.B.	REVISED -
BERNARDIN • LOCHMUELLER & ASSOCIATES, INC. 3 OAK DRIVE MARYVILLE, ILLINOIS 62062 PHONE (618) 288-4665 FAX (618) 288-4666		CHECKED - A.C.S.	REVISED -
	PLOT SCALE =	DRAWN - B.B.	REVISED -
	PLOT DATE = 2:29:47 PM 8/15/2013	CHECKED - C.J.F.	REVISED -

STATE OF ILLINOIS
DEPARTMENT OF TRANSPORTATION

PIER 1 DETAILS
STRUCTURE NO. 025-0062
SHEET NO. 16 of 20 SHEETS

F.A.I. RTE.	SECTION	COUNTY	TOTAL SHEETS	SHEET NO.
70	(25-4HB-2)I	EFFINGHAM	1760	1756
		CONTRACT NO. 74295		
		ILLINOIS FED. AID PROJECT		