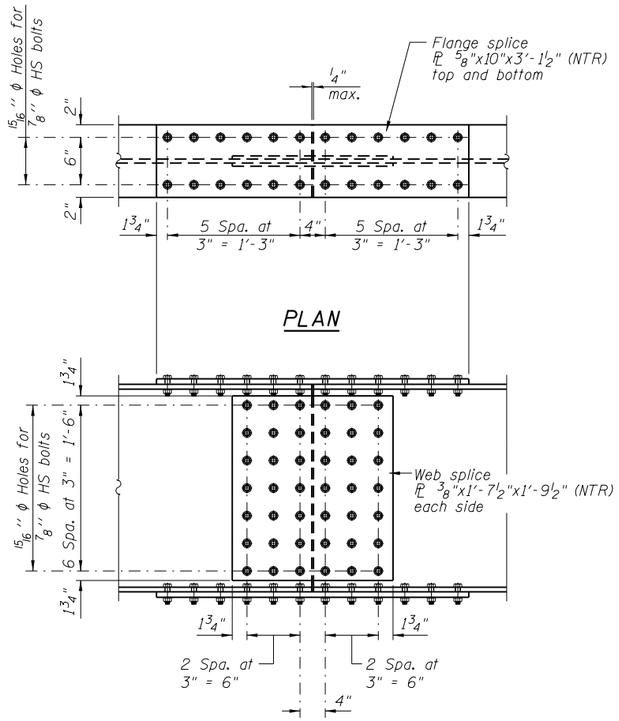

ELEVATION

SPLICE DETAIL

(12 Required)

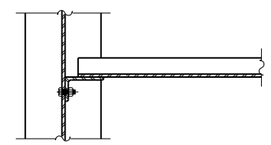

SECTION A-A

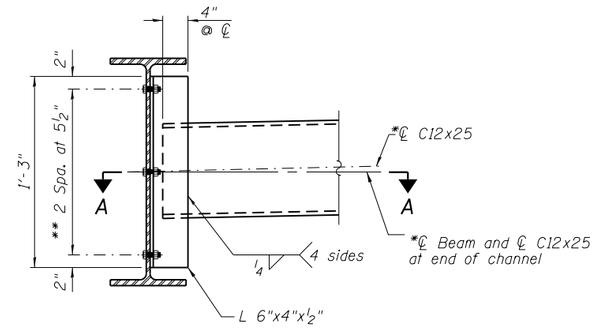

INTERIOR DIAPHRAGM

Note:
Two hardened washers required for each set of oversized holes.
* Alternate C12x30 channels are permitted to facilitate material acquisition. Calculated weight of structural steel is based on the lighter section.
The alternate, if utilized, shall be provided at no additional cost to the Department.
** 3/4" ϕ HS bolts, 15/16" ϕ holes

*** Top of Beam Elevations						
Location	Beam 1	Beam 2	Beam 3	Beam 4	Beam 5	Beam 6
CL Brg at S. Abut	613.69	613.80	613.90	613.90	613.80	613.69
CL Brg at Pier 1	613.44	613.55	613.65	613.65	613.55	613.44
CL Splice 1	613.37	613.48	613.58	613.58	613.48	613.37
CL Splice 2	613.22	613.33	613.43	613.43	613.33	613.22
CL Brg at Pier 2	613.18	613.29	613.39	613.39	613.29	613.18
CL Brg at N. Abut	613.01	613.12	613.21	613.21	613.12	613.01

*** For fabrication only

NOTES

All diaphragms shall be installed as steel is erected and secured with erection pins and bolts except as otherwise noted. Individual diaphragms at supports may be temporarily disconnected to install bearing anchor rods.

Load carrying components designated "NTR" shall conform to the Impact Testing Requirements, Zone 2.

FILE NAME = pw:\\pbworkspace.dot.illinois.gov:PWIDOT\Documents\IDOT Offices\District 4\Projects\D4-68758\CADData\CADSheets\IL78 Structural - IDOT Copies\Framingdetails.dgn