ROUTE NO.	SECTION	COUNTY	TOTAL SHEETS	SHEET NO.
F.A.P. 301 (US 20)	(2HB -2)D	WINNEBAGO	107	42
FED. ROAD DIST. NO. 7	ILLINOIS	FED. AID PROJECT-		

SHEET NO. 20
43 SHEETS

Contract #64B07

STATE OF ILLINOIS
DEPARTMENT OF TRANSPORTATION

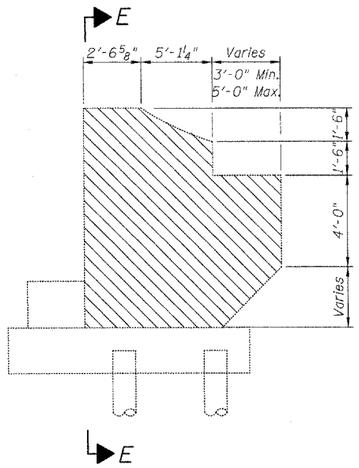

TYPICAL EXISTING WINGWALL ELEVATION

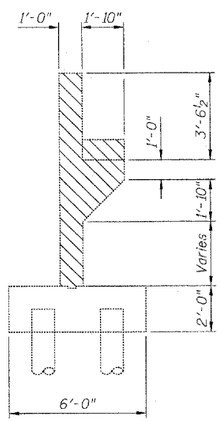

SECTION E-E

LEGEND

Concrete Removal

MINIMUM BAR LAPS

#5 Bars = 2'-2"
#6 Bars = 2'-7"
#7 Bars = 3'-5"

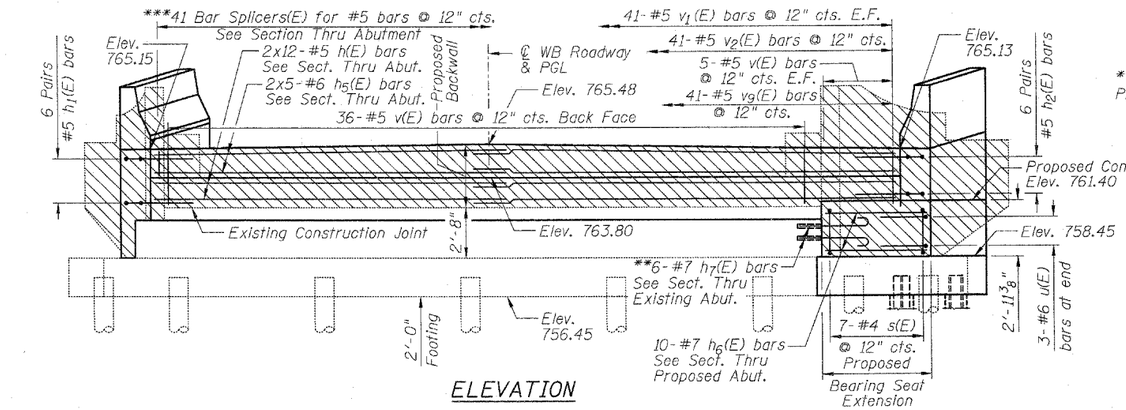

ELEVATION

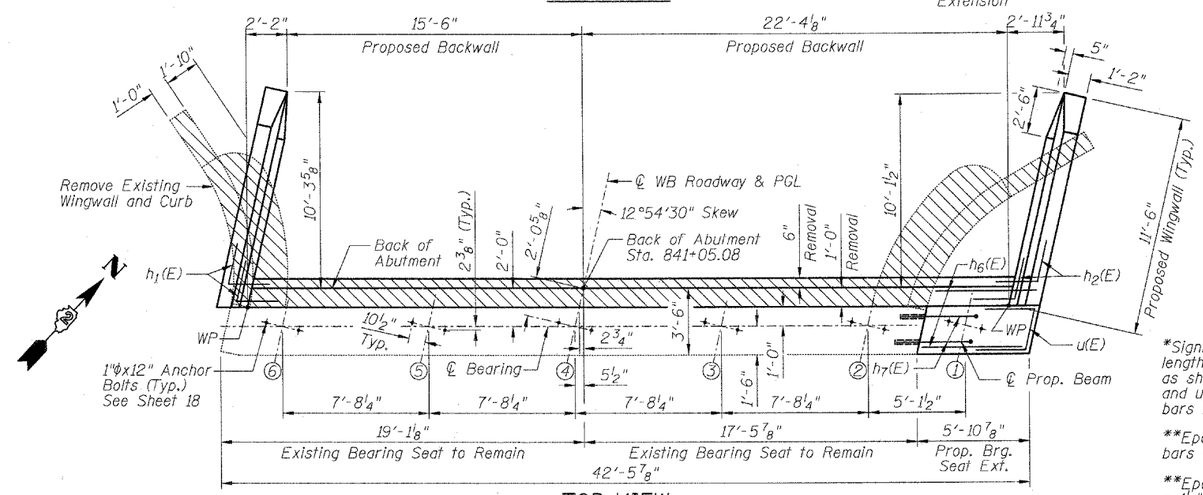

TOP VIEW

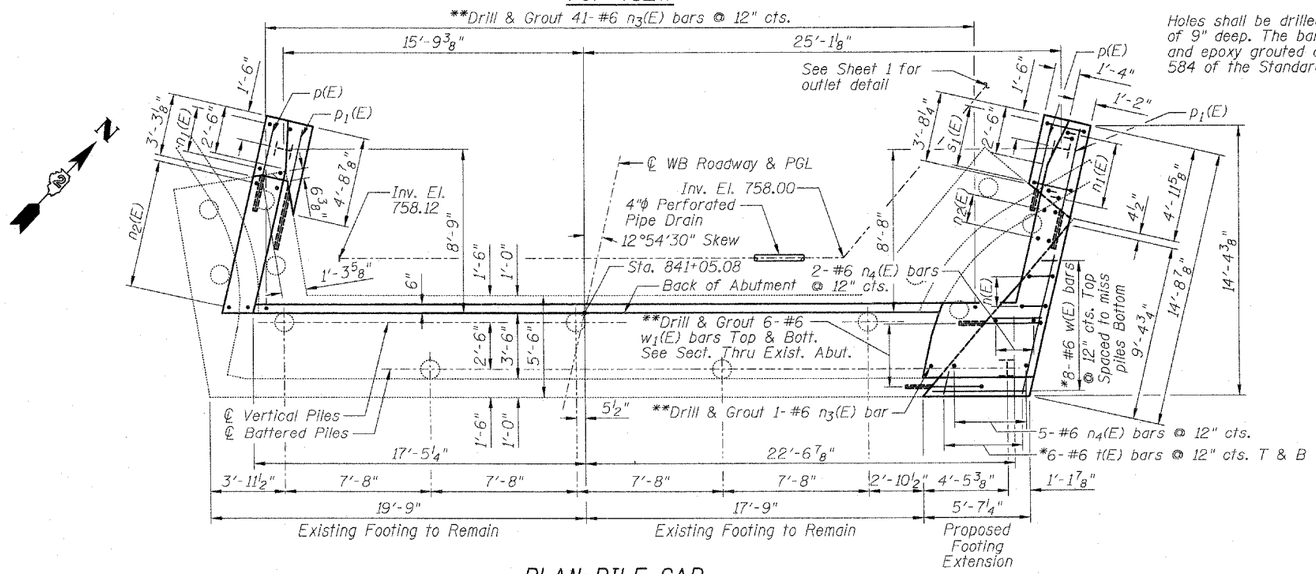

PLAN-PILE CAP

***Alternate with #5 v_1(E) bars. Place parallel to beams.

Existing reinforcement extending into the removal area shall be cleaned, straightened and incorporated into the new construction. Cost included with Concrete Removal. Existing reinforcement not extending into new construction shall be cut flush with the existing concrete and sealed with a layer of epoxy. Cost included with Concrete Removal.

The existing bearing seat and top of footing that will have concrete placed against it shall be blast cleaned according to Article 501 of the Standard Specifications. Cost included with Structure Excavation.

*Signifies cut bar. Order per length on Bill of Material. Cut as shown in Cutting Diagram and use half bars top and half bars bottom.

**Epoxy grout #6 w_1(E) & #6 n_3(E) bars in a 1"φ hole

**Epoxy grout #7 h_7(E) bars in a 1 1/8"φ hole

Holes shall be drilled a minimum of 9" deep. The bars shall be drilled and epoxy grouted according to Article 584 of the Standard Specifications.

For Bill of Material, Cutting Diagrams, Bar Details, and Abutment Sections, see Sheet 22.

DESIGNED	LAS
CHECKED	DAZ
DRAWN	SAW
CHECKED	LAS

A-1-R (<30°) 11-1-06

Plans Prepared by: Zroka Engineering, P.C.

WESTBOUND WEST ABUTMENT
F.A.P. ROUTE 301 (US 20)
OVER PRAIRIE ROAD
SECTION (2HB-2)D
WINNEBAGO COUNTY
STATION 841+89.60
STRUCTURE NO. 101-0051 (W.B.)
STRUCTURE NO. 101-0052 (E.B.)