STATE OF ILLINOIS
DEPARTMENT OF TRANSPORTATION

ROUTE NO.	SECTION	COUNTY	TOTAL SHEETS	SHEET NO.
F.A.P. 301 (US 20)	(2HB -2)D	WINNEBAGO	107	50
FED. ROAD DIST. NO. 7		ILLINOIS	FED. AID PROJECT-	

SHEET NO. 28
43 SHEETS

Contract #64B07

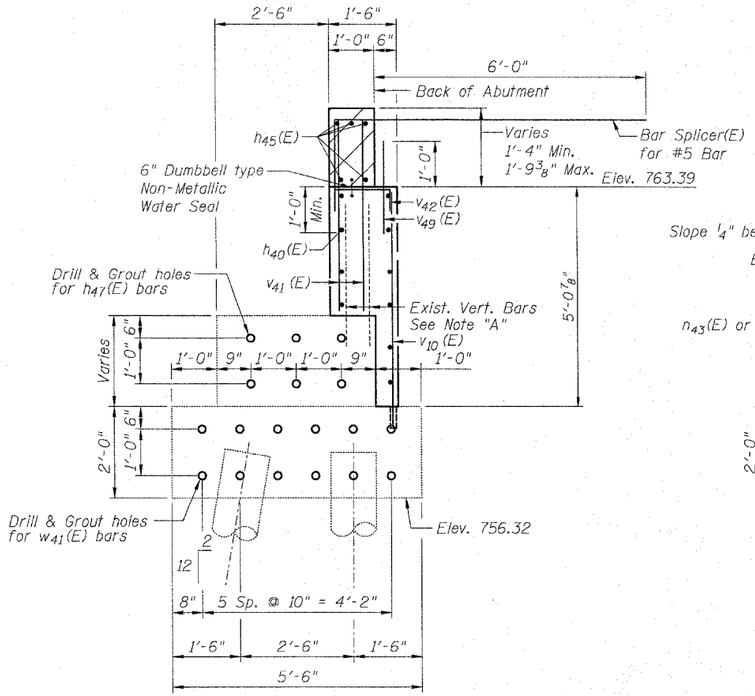

SECTION THRU EXISTING ABUTMENT

Note "A": Existing vertical bars to remain in place, blast clean and lap with new vertical bars. Existing horizontal bars shall be removed.

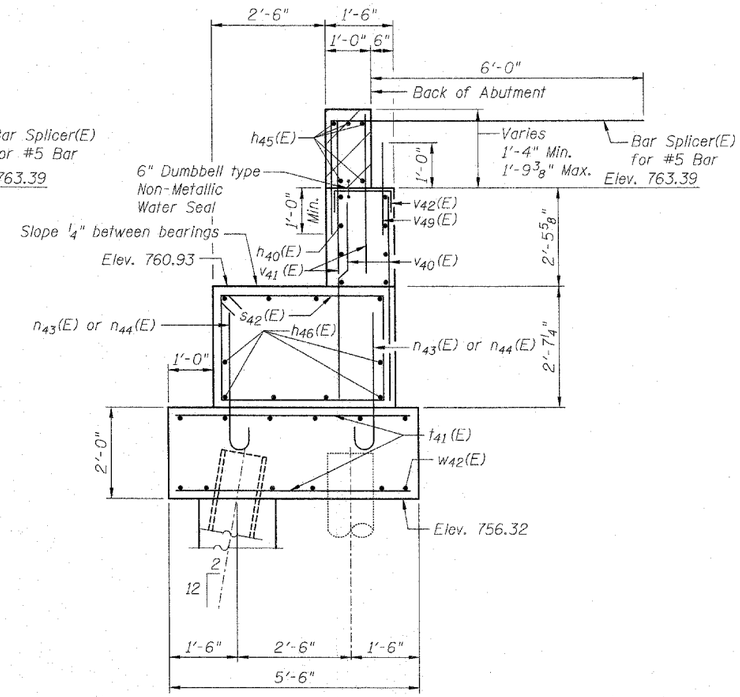

SECTION THRU PROPOSED ABUTMENT EXTENSION

Notes:

Hatched area to be poured after superstructure false work has been removed. Quantity of concrete included with Concrete Superstructure.

Space reinforcement in cap to miss anchor bolts.

Pour steps monolithically with cap.

For details of piles and Concrete Encasement details, see sheet 38.

For details of Bar Splicers, see sheet 37.

For drainage details behind Abutment, see Sheet 36.

Concrete Sealer shall be applied to all permanently exposed portions of the proposed backwalls, abutment fronts and bearing seats, new concrete only.

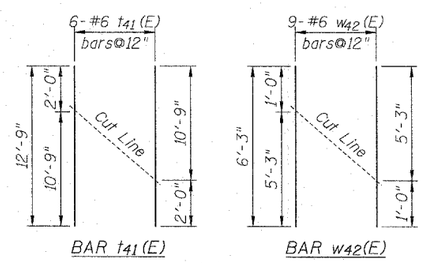

BAR t_{41}(E) BAR w_{42}(E)

CUTTING DIAGRAMS

Order bars full length. Cut as shown and use half of bars top and half on bottom.

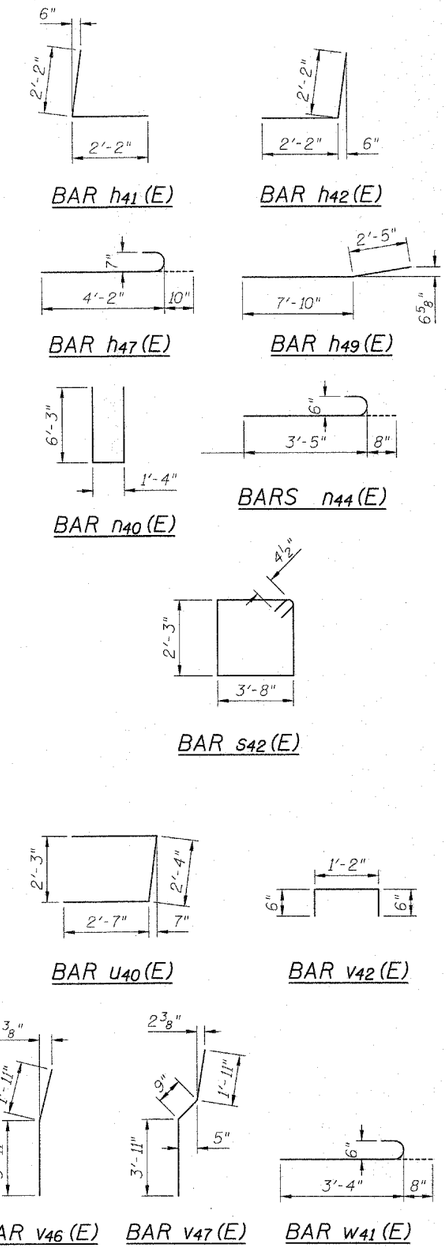

ABUTMENT BILL OF MATERIAL

Bar	No.	Size	Length	Shape
h_{40}(E)	16	#5	21'-1"	
h_{41}(E)	10	#5	4'-4"	
h_{42}(E)	10	#5	4'-4"	
h_{45}(E)	10	#6	21'-3"	
h_{46}(E)	10	#7	5'-6"	
h_{47}(E)	6	#7	5'-0"	
h_{48}(E)	26	#4	10'-3"	
h_{49}(E)	18	#4	10'-3"	
n_{40}(E)	6	#6	13'-10"	
n_{42}(E)	25	#6	6'-4"	
n_{43}(E)	7	#6	3'-1"	
n_{44}(E)	5	#6	4'-1"	
s_{42}(E)	7	#4	12'-7"	
t_{41}(E)	6	#6	12'-9"	
u_{40}(E)	3	#6	7'-6"	
v_{40}(E)	10	#5	4'-10"	
v_{41}(E)	82	#5	3'-5"	
v_{42}(E)	41	#5	2'-2"	
v_{46}(E)	6	#6	5'-10"	
v_{47}(E)	16	#6	6'-7"	
v_{48}(E)	22	#6	6'-5"	
v_{49}(E)	41	#5	2'-0"	
v_{50}(E)	36	#5	5'-7"	
w_{41}(E)	12	#6	4'-0"	
w_{42}(E)	9	#6	6'-3"	

Item	Unit	Quantity
Structure Excavation	Cu. Yd.	74
Concrete Structures	Cu. Yd.	20.5
Reinforcement Bars, Epoxy Coated	Pound	3,180
Furnishing Steel Piles, HP12x53	Foot	55
Driving Piles	Foot	54
Concrete Encasement	Cu. Yd.	.4
Concrete Sealer	Sq. Ft.	263
Porous Granular Embankment, Special	Cu. Yd.	40
Concrete Removal	Cu. Yd.	14.0
Geocomposite Wall Drain	Sq. Yd.	22.5
Pipe Underdrains for Structures 4"	Foot	50
Bar Splicers	Each	41

PILE DATA

Type: HP12x53
Nominal Required Bearing: 418 kips
Allowable Resistance Available: 139 kips
Est. Length: 55'
No. Production Piles: 1
No. Test Piles: None

The Steel H-piles shall be according to AASHTO M270 Grade 50.

Plans Prepared by: Kudrna & Associates, Ltd.

DESIGNED	SSM
CHECKED	JLA
DRAWN	GYR
CHECKED	SSM

EASTBOUND WEST
ABUTMENT DETAILS
F.A.P. ROUTE 301 (US 20)
OVER PRAIRIE ROAD
SECTION (2HB-2)D
WINNEBAGO COUNTY
STATION 841+89.60
STRUCTURE NO. 101-0051 (W.B.)
STRUCTURE NO. 101-0052 (E.B.)