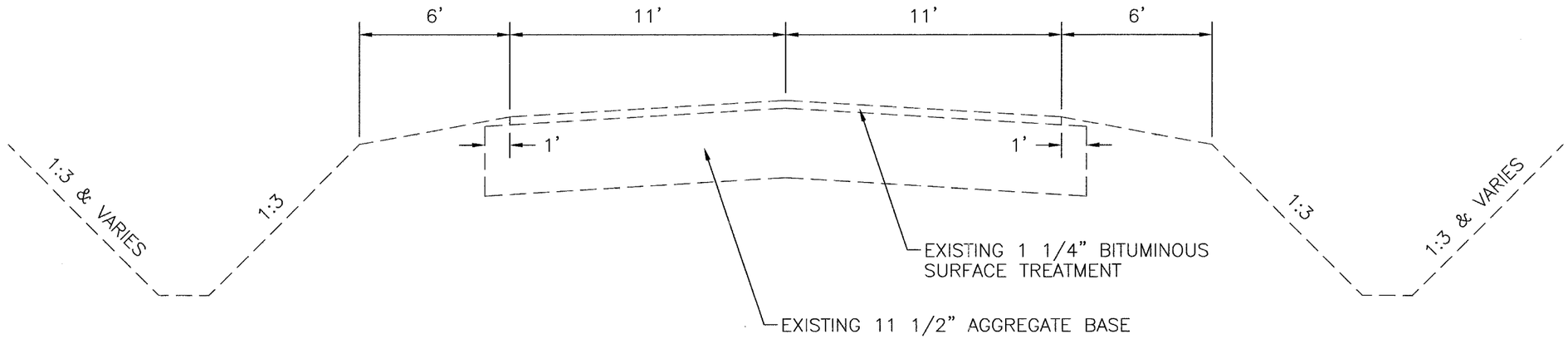

EXISTING TYPICAL SECTION

STA. 294+00 TO STA. 354+94.88
STA. 359+98.77 (BK) / 359+99.80 (AH) TO STA. 361+76.2
STA. 361+91.95 TO STA. 461+16 (BK)
STA. 110+00 (AH) TO STA. 114+88

NOTE: STATION EQUATIONS
STA. 319+17.50 (BK) = STA. 291+61.00 (AH)
STA. 359+98.77 (BK) = STA. 359+99.80 (AH)
STA. 461+16 (BK) = STA. 110+00 (AH)

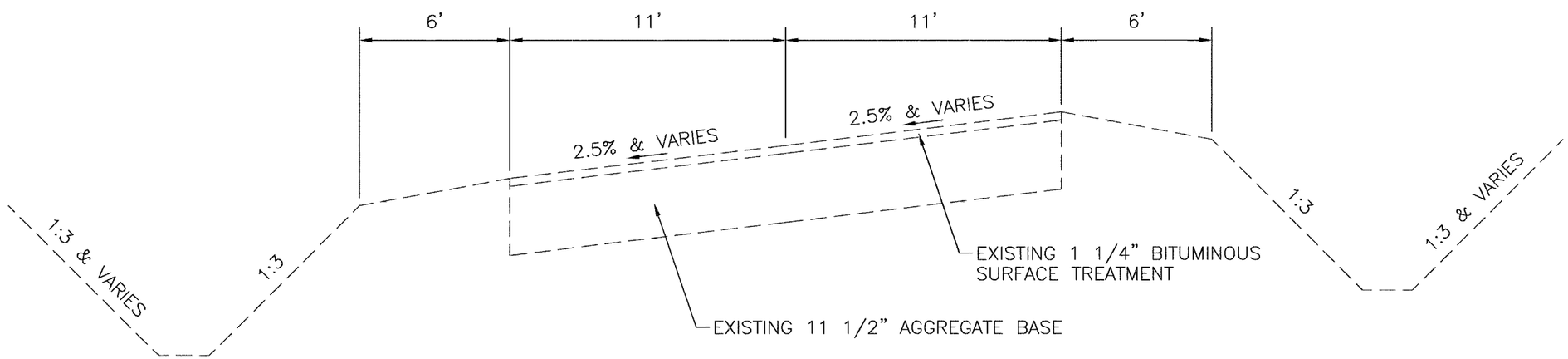

EXISTING TYPICAL SECTION

STA. 354+94.88 TO STA. 359+98.77 (BK)
359+99.80 (AH)

DRAWN BY: L.A.G.	CAD/.DWG: TYPX	REVISIONS DATE / BY	CHAMLIN & ASSOCIATES	PERU MORRIS ILLINOIS	C.H. 33 (ANGLING ROAD) 2007 SECTION 05-00198-00-RS	TYPICAL SECTIONS	SCALE: NONE	SHEET 7
CHECKED BY: D.J.D.	DATE: 04/07						FILE NO.: 6813.00Y-1	OF 33