CONTRACT NO. 89318

| F.A.U. RTE. | SECTION | COUNTY | TOTAL SHEETS | SHEET NO. |
|---|---|---|---|---|
| 6711 | 00-00164-00-SP | TAZEWELL | 80 | 53 |
| STA. | | TO STA. | | |
| FED. ROAD DIST. NO. | | ILLINOIS | FED. AID PROJECT | |

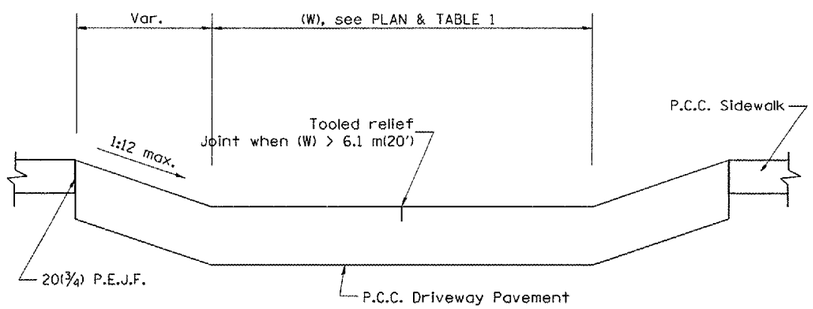


SECTION A-A

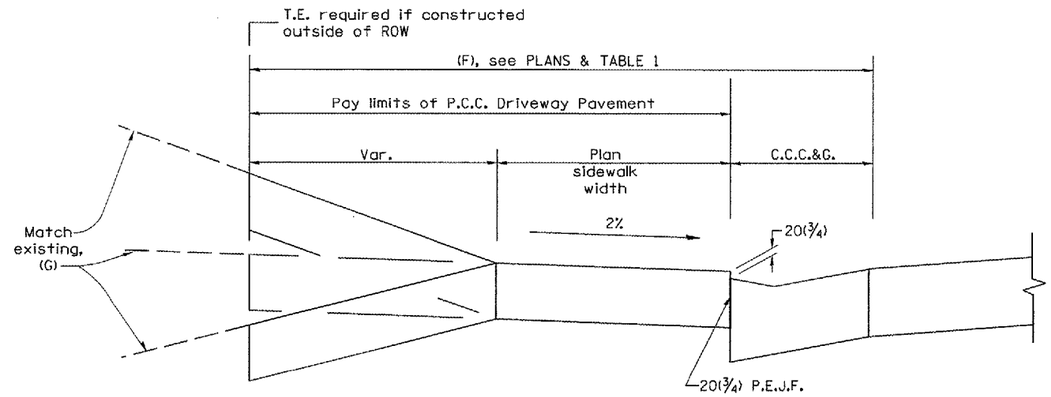


SECTION B-B

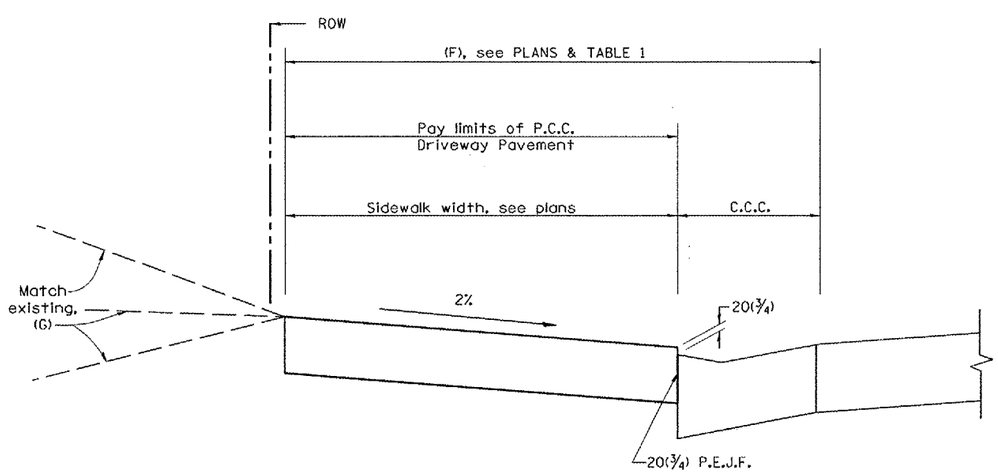


SECTION C-C

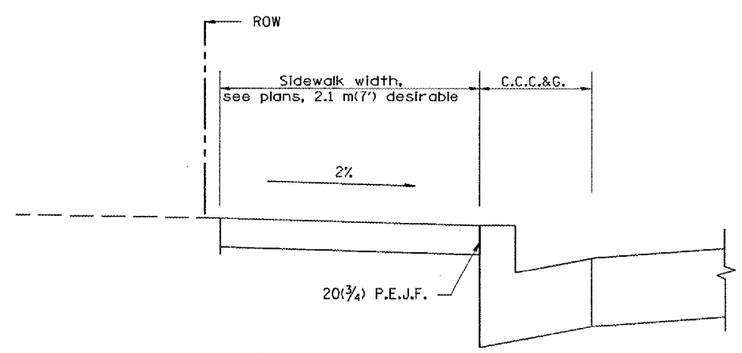


SECTION D-D

SHEET 2 OF 2
CADD STD NO. 423101-D4

MAURER-STUTZ, INC.

SPECIAL DETAIL 2

URBAN ENTRANCES ACCESSIBLE TO THE DISABLED FOR CURBLINE SIDEWALKS