F.A.I. RTE.	SECTION	COUNTY	TOTAL SHEETS	SHEET NO.
57/64	(41-3)HBK	JEFFERSON	518	282
STA.		TO STA.		
FED. ROAD DIST. NO.	ILLINOIS	FED. AID PROJECT		

CONTRACT NO. 98963

Sheet 12 of 25

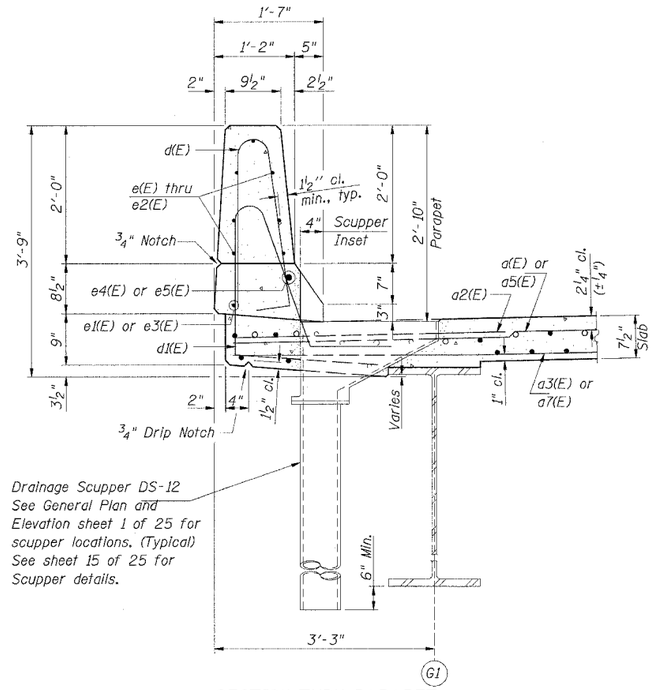

SECTION THRU PARAPET
(Exterior Parapet at Roadway)

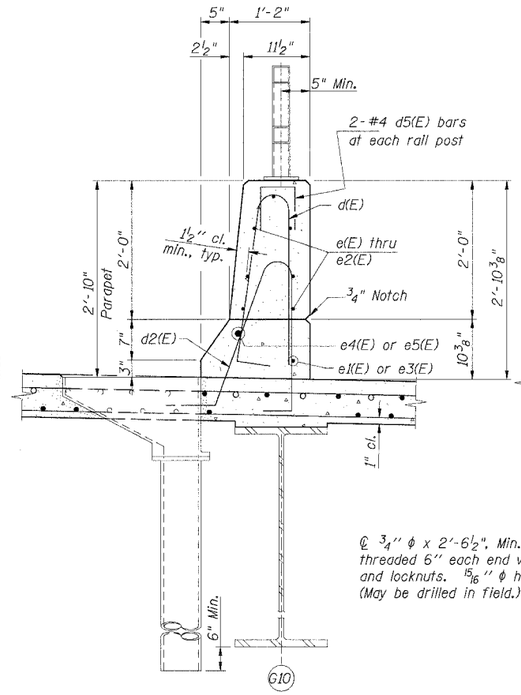

SECTION THRU PARAPET
(Parapet Between Roadway & Walkway)

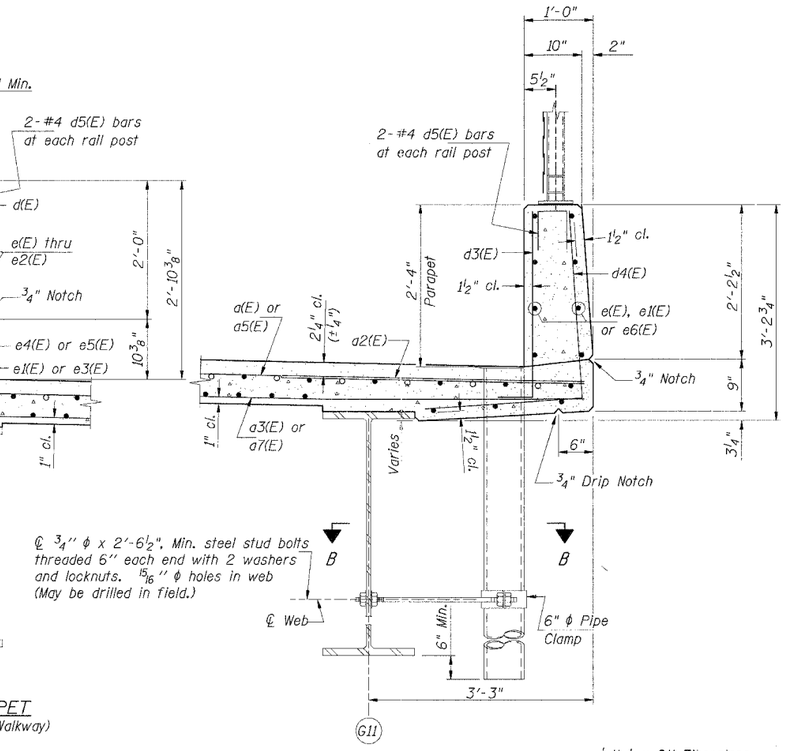

SECTION THRU PARAPET
(Exterior Parapet at Walkway)

SUPERSTRUCTURE BILL OF MATERIAL

Bar	No.	Size	Length	Shape
a(E)	1090	#5	32'-7"	
a1(E)	549	#5	26'-8"	
a2(E)	566	#6	6'-0"	
a3(E)	754	#5	27'-10"	
a4(E)	374	#5	34'-10"	
a5(E)	40	#5	34'-1"	
a6(E)	17	#5	27'-6"	
a7(E)	24	#5	28'-10"	
a8(E)	14	#5	35'-10"	
a9(E)	12	#5	31'-6"	
a10(E)	56	#5	2'-0"	
b(E)	999	#5	30'-10"	
b1(E)	264	#6	31'-1"	
b2(E)	864	#5	29'-5"	
b3(E)	96	#5	14'-9"	
c(E)	520	#5	1'-3"	
c1(E)	254	#5	19'-6"	
c2(E)	6	#5	19'-1"	
d(E)	568	#5	5'-7"	
d1(E)	284	#5	7'-10"	
d2(E)	284	#5	6'-9"	
d3(E)	260	#6	3'-2"	
d4(E)	260	#4	4'-10"	
d5(E)	108	#4	2'-0"	
e(E)	242	#4	17'-5"	
e1(E)	48	#4	23'-2"	
e2(E)	14	#4	17'-0"	
e3(E)	16	#4	28'-0"	
e4(E)	16	#8	30'-1"	
e5(E)	4	#8	23'-2"	
e6(E)	8	#4	17'-1"	
m(E)	12	#6	31'-11"	
m1(E)	18	#6	32'-7"	
m2(E)	44	#6	11'-4"	
m3(E)	20	#6	8'-3"	
m4(E)	4	#6	2'-10"	
s(E)	152	#5	6'-9"	
s1(E)	152	#4	13'-7"	
v(E)	174	#5	3'-4"	
Reinforcement Bars, Epoxy Coated			Pound	195970
Concrete Superstructure			Cu. Yds.	814.5

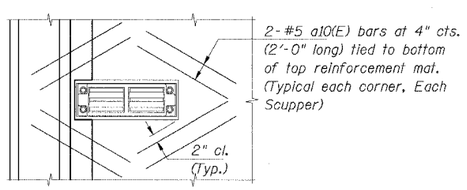

PARTIAL PLAN - SCUPPERS

Inset Scuppers at North Parapet shown, flush mounted South Parapet Scuppers similar.

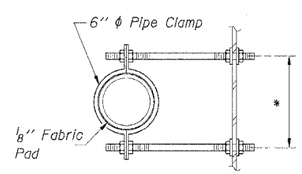

SECTION B-B

* Dimension as required by Pipe Clamp

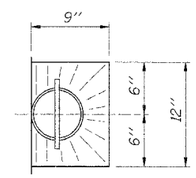

TOP PLAN

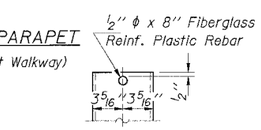

FIBERGLASS PIPE

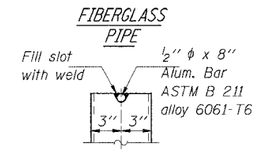

ALUMINUM TUBE

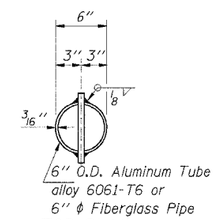

TOP PLAN
(Showing Aluminum Tube)

Notes:

The exterior surfaces of the floor drains shall be painted with the finish coat as specified in the special provisions for Cleaning and Painting New Metal Structures. The exterior surfaces of the drains shall be cleaned according to Steel Structures Painting Council's Spec. SSPC-SP1 prior to painting.

Fiberglass pipe shall conform to ASTM D 2996, with short-time rupture strength hoop tensile stress of 30,000 p.s.i. minimum.

Drains shall be located clear of all cross frames.

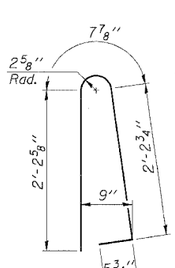

BAR d(E)

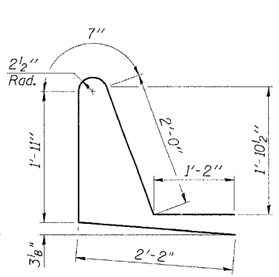

BAR d1(E)

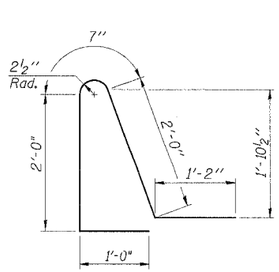

BAR d2(E)

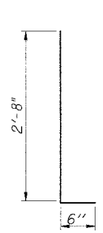

BAR d3(E)

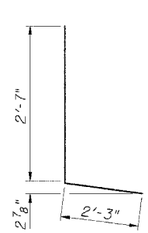

BAR d4(E)

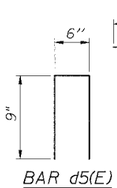

BAR d5(E)

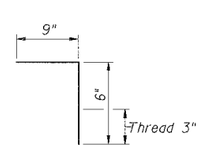

BAR c(E)

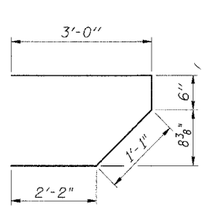

BAR s(E)

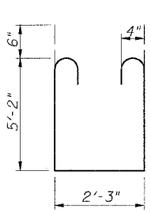

BAR s1(E)

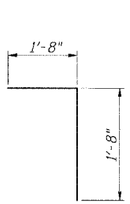

BAR V(E)

SUPERSTRUCTURE DETAILS
VETERANS MEMORIAL DR. over F.A.I. ROUTES 57/64
SECTION (41-3)HBK
JEFFERSON COUNTY
STATION 49+72.27
STRUCTURE NO. 041-0108

© Copyright Hanson Professional Services Inc. 2007

HANSON

JOB NO. 98S2019A

DATE 03-14-07

March 2007 Submittal

LAYOUT	VMM	03/12/07	
DRAWN	DAB	03/12/07	
REVIEWED			

LAYOUT	GBR	02/02/04
DRAWN	Rdd	02/02/04
REVIEWED	TEH	02/02/04

03-20-2007, 10:46 AM
I:\98Jobs\98S2019\Structure\Sheets\Final Plans 03-18-04\F-01-2.dgn