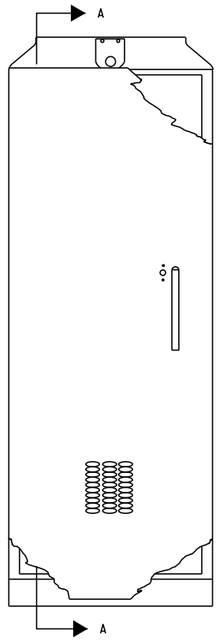

FRONT VIEW
(DOOR CLOSED)
(MODEL 334)

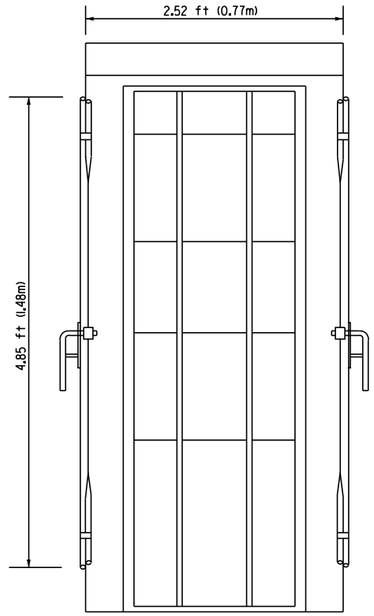

SECTION A-A
FOUNDATION MOUNTED CABINET
(MODEL 334)

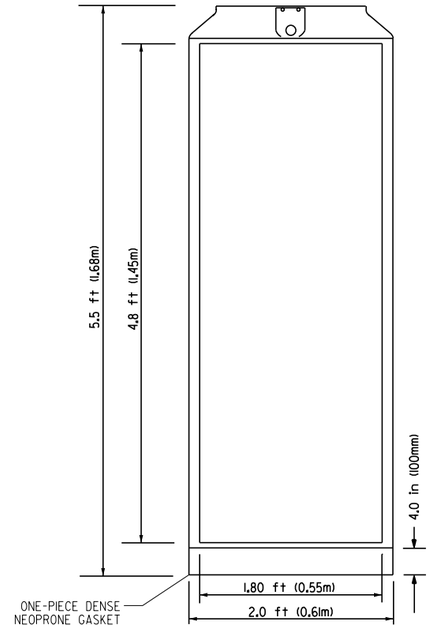

FRONT VIEW
(DOOR REMOVED)
(MODEL 334)

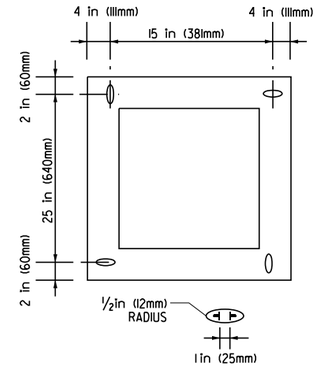

BOTTOM VIEW
(MODEL 334)

NOTES (MODEL 334 CABINET):

1. REFER TO SPECIAL PROVISIONS FOR CABINET DETAILS AND ADDITIONAL REQUIREMENTS.
2. CABINET ENTRIES INCLUDE VERTICAL ARRANGEMENT FOR MAJOR EQUIPMENT ITEMS ONLY.
3. THERE WILL BE ADDITIONAL ITEMS INSTALLED IN THE CABINET ON SIDE AND BACK PANELS AS PER THE SPECIAL PROVISIONS.
4. PROVIDE ALL UNUSED SPACE AT BOTTOM OF CABINET.
5. THE CONTRACTOR SHALL INSTALL INSULATED BUSHINGS AND DUCT SEALANT AT ALL CONDUIT BEND TERMINATIONS IN FOUNDATIONS.
6. CONCRETE BASE TO BE FORMED AT LEAST 6.0 in (150mm) BELOW THE GROUND SURFACE.
7. CONCRETE BASE MUST BE CAST IN PLACE.
8. THE CABINET SHALL BE EQUIPPED WITH A THERMOSTATICALLY CONTROLLER VENTILATION FAN, DELUXE PLEATED FILTER, POWER PANEL, 96 FIBER RACK MOUNTED ENCLOSURE WITH SPLICE TRAYS, 19" MOUNTING RAILS, EQUIPMENT SHELF, AND SLIDE OUT DRAWER WITH STORAGE.
9. ALL WORK INDICATED SHALL BE PAID FOR UNDER ITEM CABINET, MODEL 334 EXCLUSIVE OF THE CONCRETE FOUNDATION.

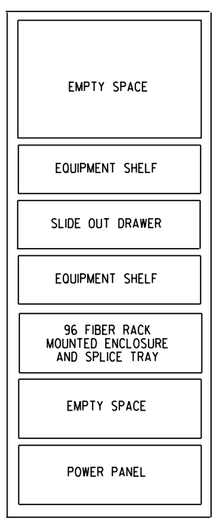

CONTROL CABINET LAYOUT (TYPICAL)
(MODEL 334)

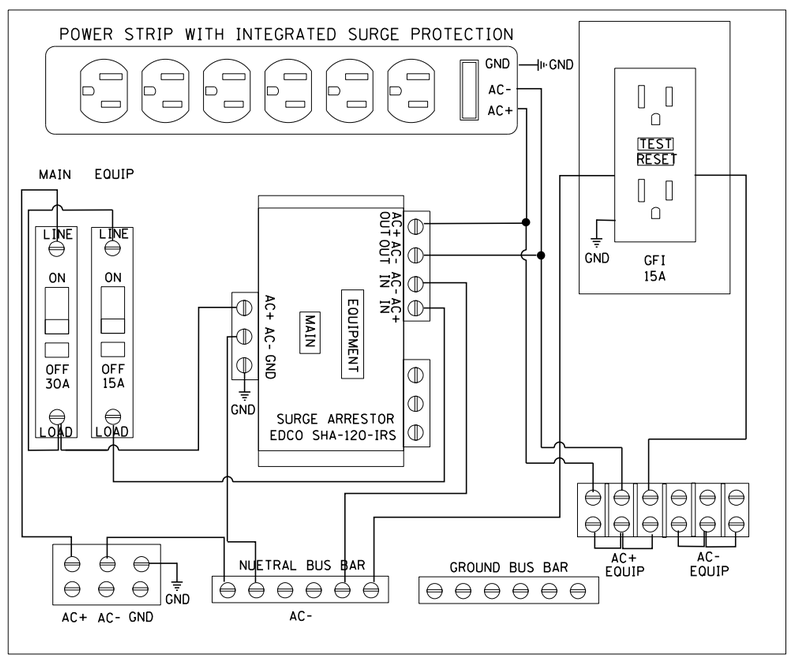

TYPE 334 CABINET POWER PANEL DETAIL
(POWER PANEL TO BE EQUIPPED WITH PLEXI-GLASS SAFETY SHIELD)

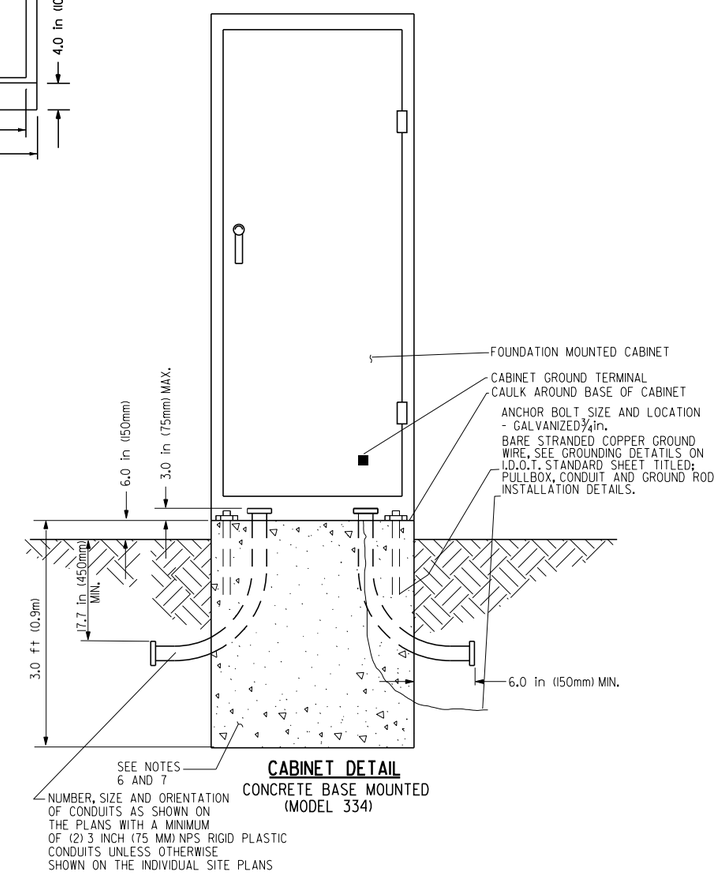

CABINET DETAIL
CONCRETE BASE MOUNTED
(MODEL 334)

FILE NAME = ...\ITS (IDOT)\D468620-ITS-44.dgn	USER NAME = tblank	DESIGNED -	REVISED -	STATE OF ILLINOIS DEPARTMENT OF TRANSPORTATION	TYPE 334 CABINET DETAIL	F.A.P. RTE.	SECTION	COUNTY	TOTAL SHEETS	SHEET NO.
		DRAWN -	REVISED -			74	90-[14R;(14HB-4,14,14HVB)BR]	TAZEWELL	2433	1708
	PLOT SCALE =	CHECKED -	REVISED -					CONTRACT NO. 68620		
	PLOT DATE = 7/17/2012	DATE -	REVISED -		SCALE: NONE / SHEET NO. 44 OF 50 SHEETS / STA. / TO STA.		ILLINOIS FED. AID PROJECT			