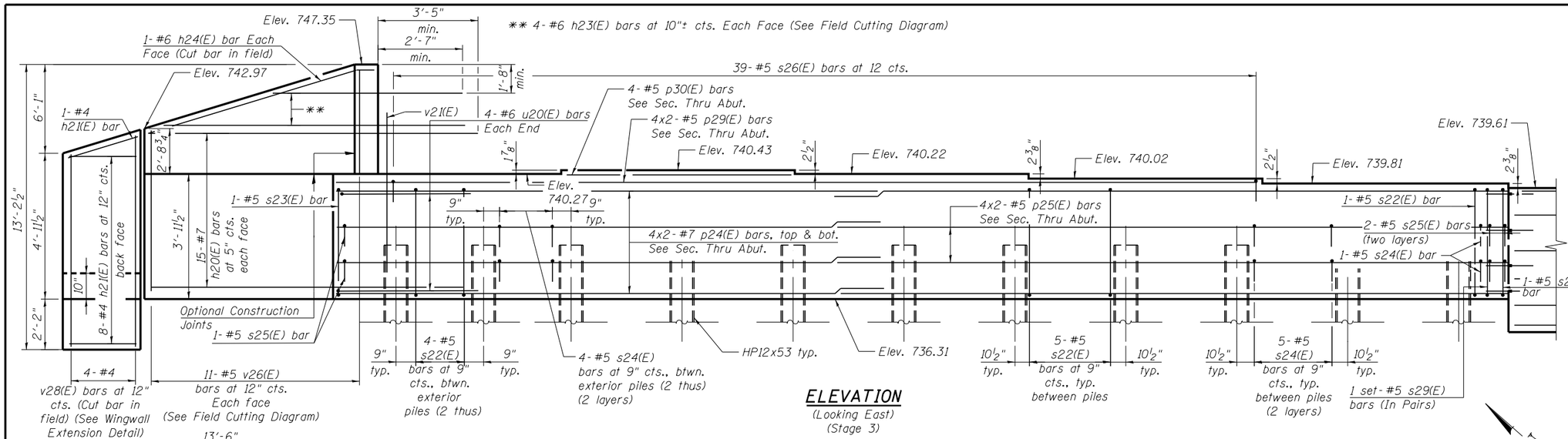

ELEVATION
(Looking East)
(Stage 3)

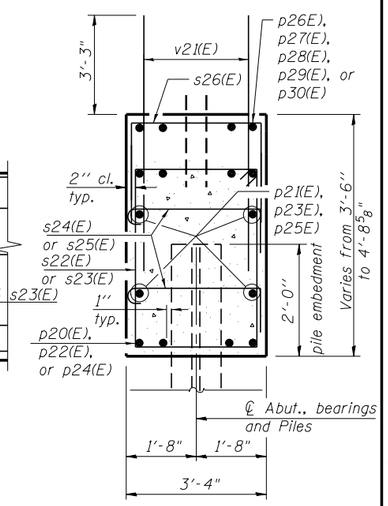

SECTION THRU ABUT.

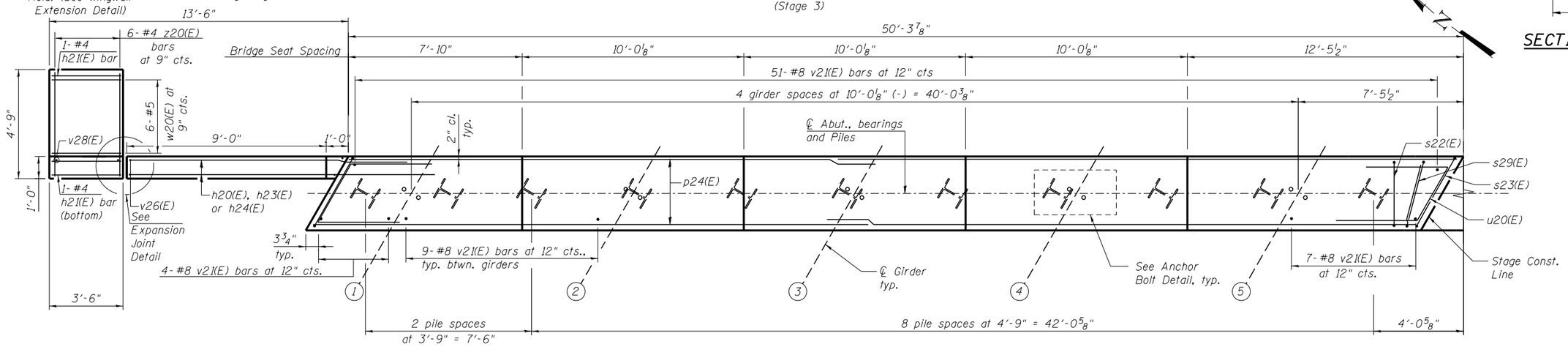

PLAN
(Stage 3)

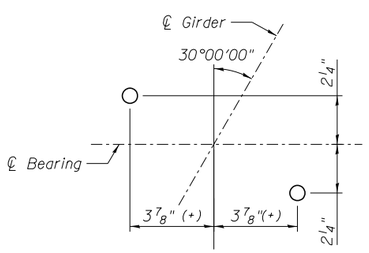

ANCHOR BOLT DETAIL

PILE DATA

Type: HP12x53
Nominal Required Bearing: 342 kips
Factored Resistance Available: 188 kips
Est. Length: 67 ft.
No. Production Piles: 29
No. Test Piles: 1

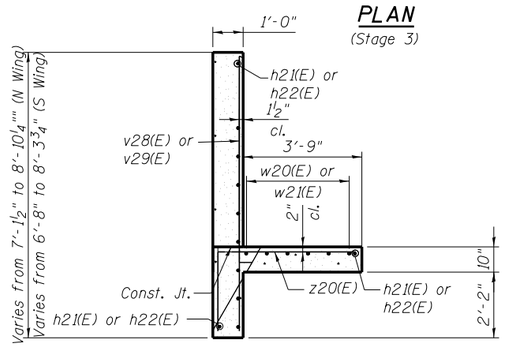

WINGWALL EXTENSION DETAIL

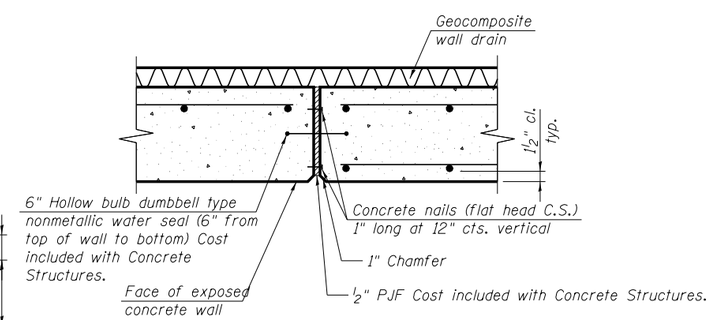

EXPANSION JOINT DETAIL

NOTES:

1. For details of Bar Splicers, see sheet SC44.
2. For details of piles and Concrete Encasement, see sheet SC43
3. Pour steps monolithically with cap.
4. For Bill of Material and Bar List, see sheet SC39.
5. Adjust bar spacing to avoid anchor bolt locations.
6. Adjust s29(E) bars in field to form a single closed stirrup between the s22(E) bar and s23(E) bar.

benesch engineers · scientists · planners
Alfred Benesch & Company
205 North Michigan Avenue, Suite 2400
Chicago, Illinois 60601
312-565-0450 Job No. 10056

FILE NAME = 0900169_68620_38_abut4.dgn	USER NAME = mbecker	DESIGNED - DTS	REVISED -	STATE OF ILLINOIS DEPARTMENT OF TRANSPORTATION	EAST ABUTMENT DETAILS 1 OF 3 STRUCTURE NO. 090-0169	F.A.I. RTE.	SECTION	COUNTY	TOTAL SHEETS / SHEET NO.
		CHECKED - SLD/JLS	REVISED -			74	90-(14R;(14HB-4,14,14HVB)BR)	TAZEWELL	2433 / 2014
	PLOT SCALE =	DRAWN - PRT/DTS	REVISED -					CONTRACT NO. 68620	
	PLOT DATE = 7/18/2012	CHECKED - SLD	REVISED -		SHEET NO. SC38 OF SC63 SHEETS		ILLINOIS FED. AID PROJECT		

x:\10000s\10056\engineering_documents_phase_ii\174over_Jackson\Final\0900169_68620_38_abut4.dgn 8:11:02 AM 7/18/2012