STATE OF ILLINOIS
DEPARTMENT OF TRANSPORTATION

ROUTE NO.	SECTION	COUNTY	TOTAL SHEETS	SHEET NO.
F.A.I. RTE. 90/94	*	COOK	312	159
FED. ROAD DIST. NO. 1	ILLINOIS	FED. AID PROJECT-		

* (1919.15 & 2021-922 PT.1) R-1

60A62

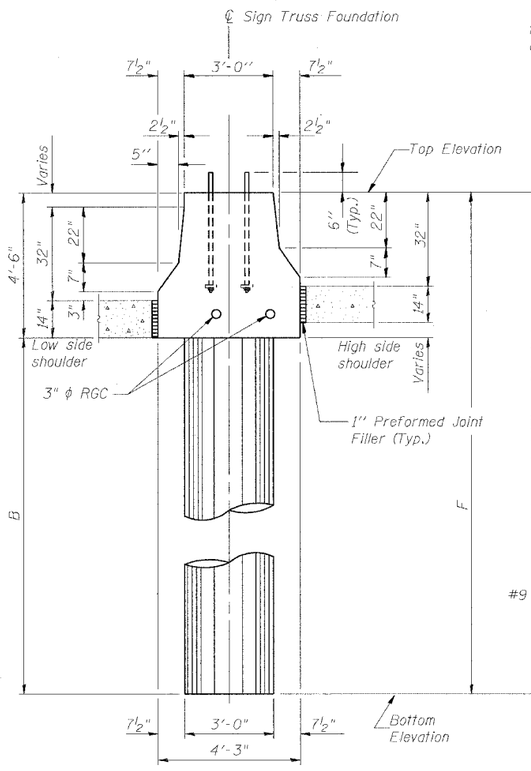

END VIEW

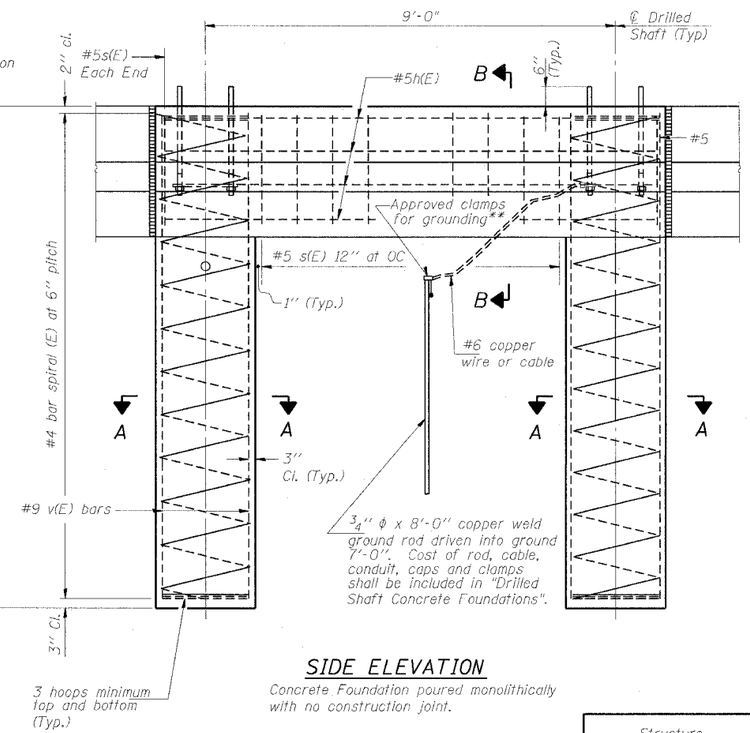

SIDE ELEVATION

Concrete Foundation poured monolithically with no construction joint.

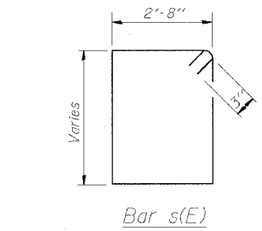

Bar s(E)

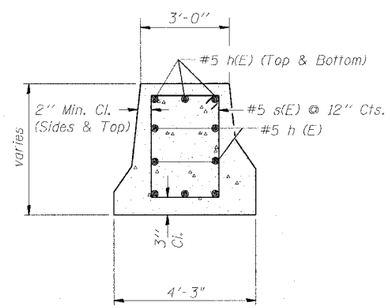

SECTION B-B

NOTES:

The foundation dimensions shown are based on the presence of mostly cohesive soils with an average Unconfined Compressive Strength (Qu) of at least 1.25 tsf, which must be determined by previous soil investigations at the jobsite. When other conditions are indicated, the boring data will be included in the plans and the foundation dimensions shown will be the result of site specific designs.

If the conditions encountered are different than those indicated, the Contractor shall notify the Engineer to determine if the foundation dimensions need to be modified. If dimensions "B" or "F" are revised by more than 12" by the Contractor, "as-built" plans shall be prepared and submitted to the District Bureau of Operations for future reference.

No sonotubes or decomposable forms shall be used below the lower conduit entrance.

Permanent metal forms or other shielding may not be left in place below that elevation without the Engineer's written permission.

Concrete shall be placed monolithically, without construction joints.

Backfill shall be placed per Article 502 of Standard Specification and prior to erection of support column.

A normal surface finish followed by a Bridge Seat Sealer application will be required on concrete surfaces above the lowest elevation 6" below finished ground line. Cost included in "Drilled Shaft Concrete Foundation".

Face of median support foundation shall match dimensions of permanent barrier wall F shape.

BAR LIST - EACH FOUNDATION

Bar	Number	Size	Length	Shape
h(E)	10	#5	11'-8"	
s(E)	9	#5	Varies	
v(E)	24	#9	F less 0'-5"	
#4(E) bar spiral .. see Side Elevation				

LEFT FOUNDATION USES SINGLE FACE MEDIAN SUPPORT FOUNDATION

Structure Number	Station	Left Foundation				Right Foundation				Class SI Concrete (Cu. Yds.)
		Elevation Top	Elevation Bottom	B	F	Elevation Top	Elevation Bottom	B	F	
1S0161094L058.1	4455+50.00	3.00'	-19.10'	18.0'	22.10'	----	----	----	----	16.2

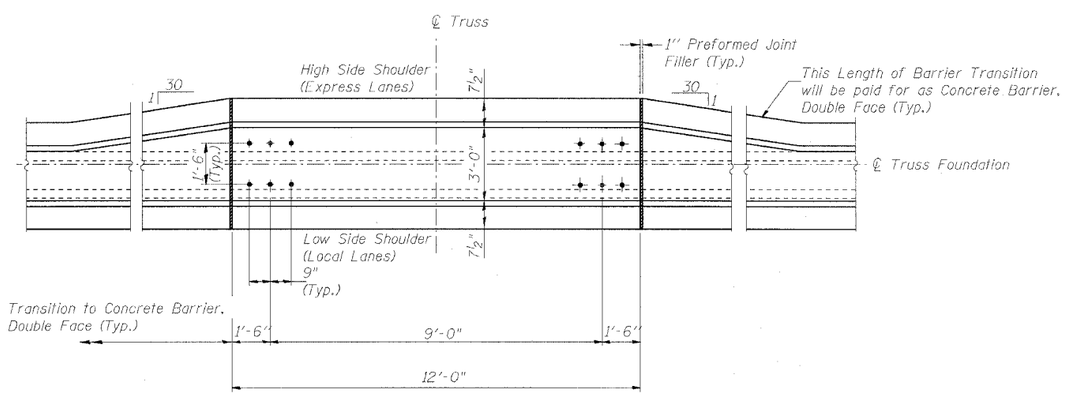

PLAN

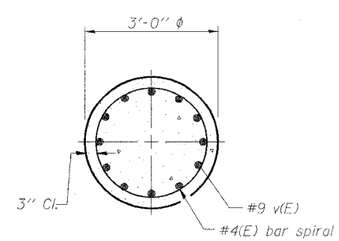

SECTION A-A

DESIGNED	-	JSS
CHECKED	-	RDP
DRAWN	-	JSS
CHECKED	-	RDP

EXAMINED _____ 20
ENGINEER OF STRUCTURAL SERVICES

PASSED
ENGINEER OF BRIDGES AND STRUCTURES

MODIFIED BY CTE ENGINEERS, INC. FROM OS4-MED

OSS-32

OVERHEAD SIGN STRUCTURES
MEDIAN SUPPORT FOUNDATION DETAILS

F.A.I. 90/94 (DAN RYAN EXPRESSWAY)
63RD STREET TO GARFIELD BLVD (NB LOCAL LANES)
PROPOSED IMPROVEMENT
63RD STREET TO GARFIELD BLVD
DOUBLE FACE MEDIAN SUPPORT FOUNDATION

6/27/2006 11:05:50 AM

P:\P40468C\IVN6\Cmts 18 & 19\SIN.Cfr 18\ASigning\SS18A0322A.sht