CONTRACT NO. 60B85

F.A.I. RTE.	SECTION	COUNTY	TOTAL SHEETS	SHEET NO.
55	2006-031 BY	WILL	137	81
STA.		TO STA.		
FED. ROAD DIST. NO.	ILLINOIS	FED. AID PROJECT		

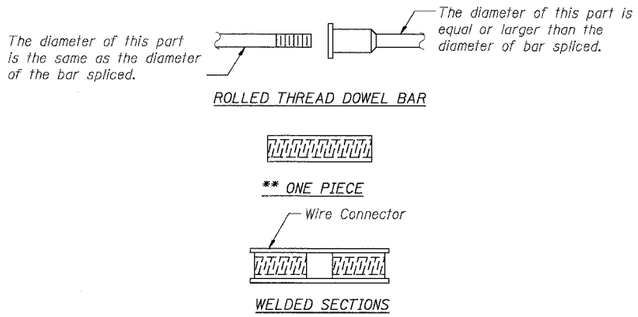

BAR SPLICER ASSEMBLY ALTERNATIVES

** Heavy Hex Nuts conforming to ASTM A 563, Grade C, D or DH may be used.

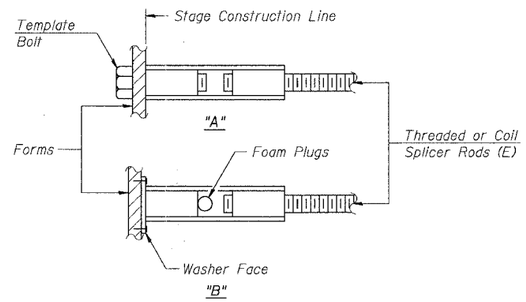

INSTALLATION AND SETTING METHODS

"A" : Set bar splicer assembly by means of a template bolt.
"B" : Set bar splicer assembly by nailing to wood forms or cementing to steel forms.
(E) : Indicates epoxy coating.

NOTES

Bar splicer assemblies shall be of an approved type and shall develop in tension at least 125 percent of the yield strength of the lapped reinforcement bars.

Splicer rods shall be of minimum 60 ksi yield strength, threaded or coiled full length.

All reinforcement bars shall be lapped and tied to the splicer rods or dowel bars.

Bar splicer assemblies shall be epoxy coated according to the requirements for reinforcement bars.

Other systems of similar design may be submitted to the Engineer for approval. Approval shall be based on certified test results from an approved testing laboratory that the proposed bar splicer assembly satisfies the following requirements:

1. Minimum Capacity (Tension in kips) = $1.25 \times fy \times A_t$
2. Minimum *Pull-out Strength (Tension in kips) = $1.25 \times fs_{allow} \times A_t$

Where fy = Yield strength of lapped reinforcement bars in ksi.
fs_{allow} = Allowable tensile stress in lapped reinforcement bars in ksi (Service Load)
A_t = Tensile stress area of lapped reinforcement bars.
* = 28 day concrete

BAR SPLICER ASSEMBLIES			
Bar Size to be Spliced	Splicer Rod or Dowel Bar Length	Strength Requirements	
		Min. Capacity kips - tension	Min. Pull-Out Strength kips - tension
~~#4~~	~~1'-8"~~	~~14.7~~	~~5.9~~
#5	2'-0"	23.0	9.2
~~#6~~	~~2'-7"~~	~~33.1~~	~~13.3~~
~~#7~~	~~3'-5"~~	~~45.1~~	~~18.0~~
~~#8~~	~~4'-6"~~	~~58.9~~	~~23.6~~
~~#9~~	~~5'-9"~~	~~75.0~~	~~30.0~~
~~#10~~	~~7'-3"~~	~~95.0~~	~~38.0~~
~~#11~~	~~9'-0"~~	~~117.4~~	~~46.8~~

Bar splicer assemblies shall be according to Section 508 of the Standard Specifications, except as noted. The furnishing and installation of bar splicer assemblies will be measured and paid for at the contract unit price each for "BAR SPLICERS."

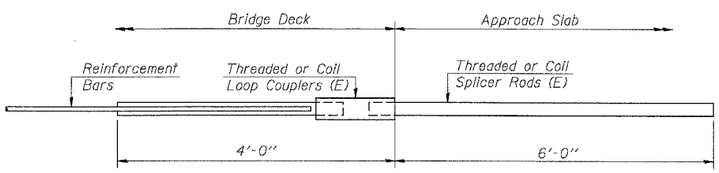

FOR INTEGRAL OR SEMI-INTEGRAL ABUTMENTS

Bar Splicer for #5 bar
Min. Capacity = 23.0 kips - tension
Min. Pull-out Strength = 9.2 kips - tension
No. Required = 124

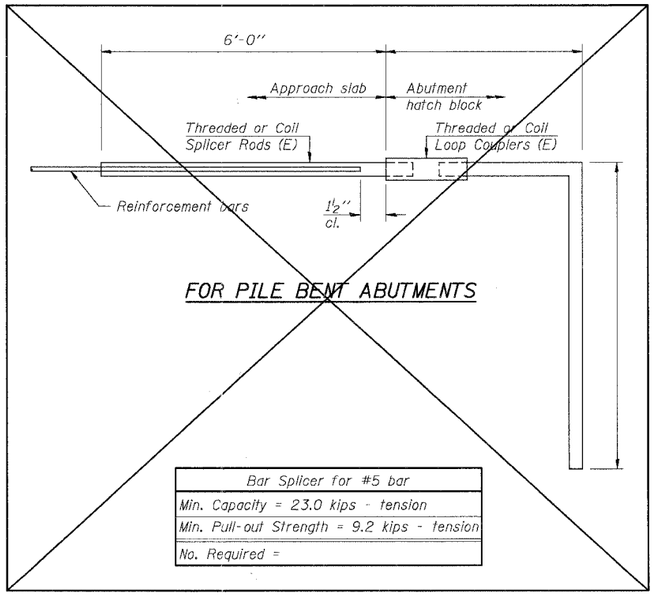

FOR PILE BENT ABUTMENTS

Bar Splicer for #5 bar
Min. Capacity = 23.0 kips - tension
Min. Pull-out Strength = 9.2 kips - tension
No. Required =

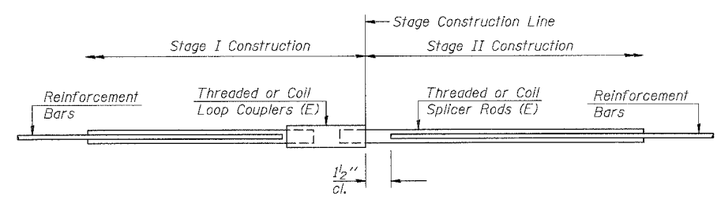

STANDARD

Bar Size	No. Assemblies Required	Location
#5	694	Deck Stage Construction Joint

BAR SPLICER ASSEMBLY DETAILS

SHT. SA-17 OF 21

REVISIONS	
NAME	DATE

ILLINOIS DEPARTMENT OF TRANSPORTATION
FAI ROUTE 55 (OVER CSX RR AND SUNNYLAND DRAIN)
BRIDGE WIDENING
SB I-55 OVER CSX RAILROAD, S.N. 099-0312
STA. 167+72.58, SECTION 2006-031 BY
WILL COUNTY

BAR SPLICER DETAILS

SCALE: DRAWN BY MDB
DATE 07/07/06 CHECKED BY MJK

TENG
TENG & ASSOCIATES, INC.
ENGINEERS/ARCHITECTS/PLANNERS
CHICAGO, ILLINOIS

BSD-1 10-22-04

PLOT DATE = $DATE$
FILE NAME = $FILEL$
PLOT SCALE = $SCALE$
USER NAME = $USER$

GARCIAVZ SA\DOCUMENT\R2361590\STRUCT\DGN\SGP19A0M3.SH1

-\BSP19A0M2.DGN
7-20-2006, 9:52:53