CONTRACT NO. 60B85

F.A.I. RTE.	SECTION	COUNTY	TOTAL SHEETS	SHEET NO.
55	2006-031 BY	WILL	137	91
STA.	TO STA.			
FED. ROAD DIST. NO.	ILLINOIS	FED. AID PROJECT		

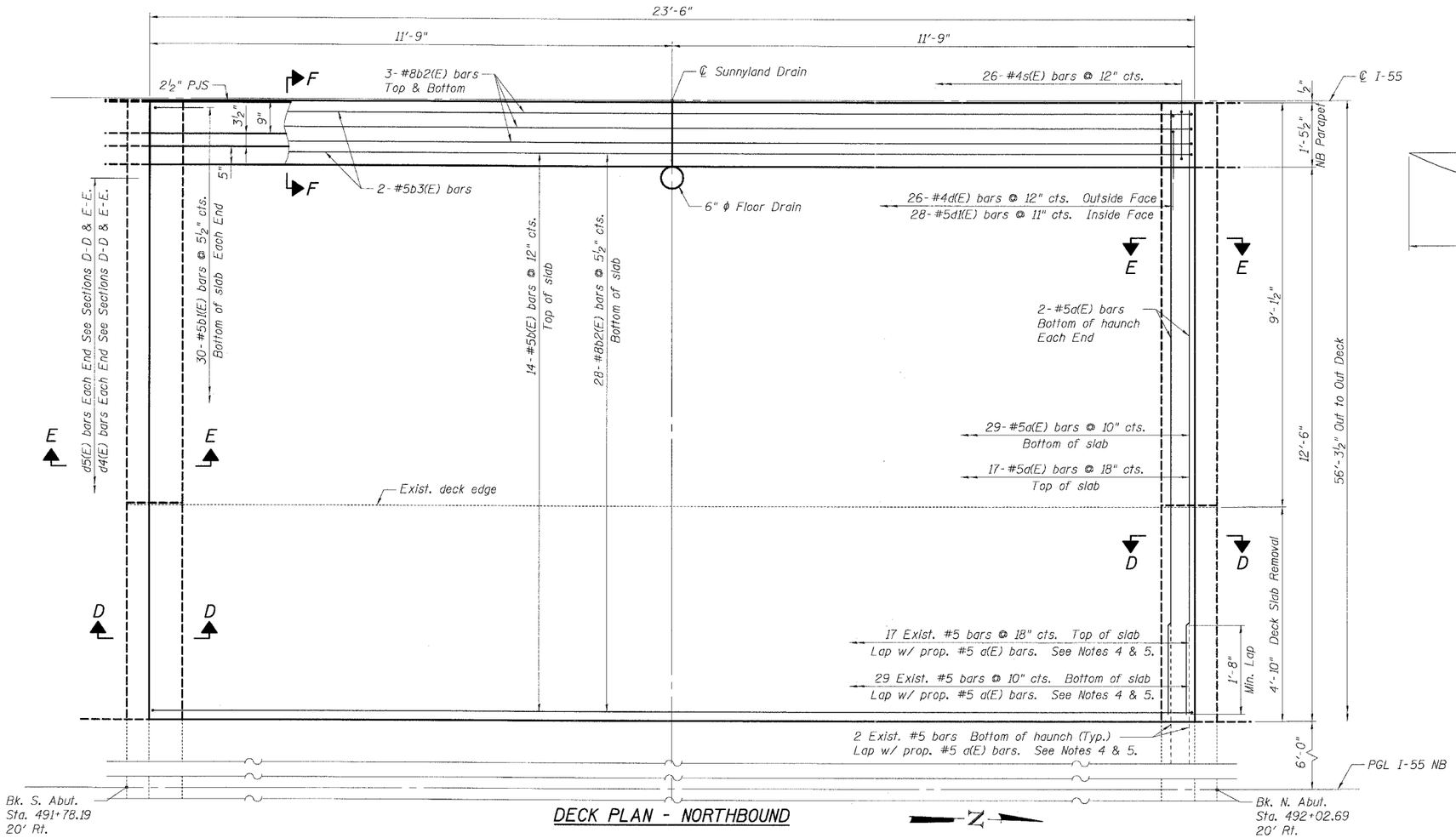

DECK PLAN - NORTHBOUND

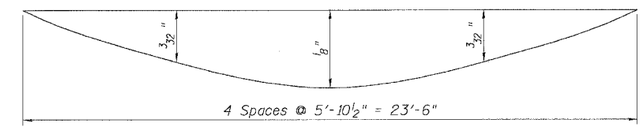

DEAD LOAD DEFLECTION DIAGRAM

(Includes weight of concrete only)

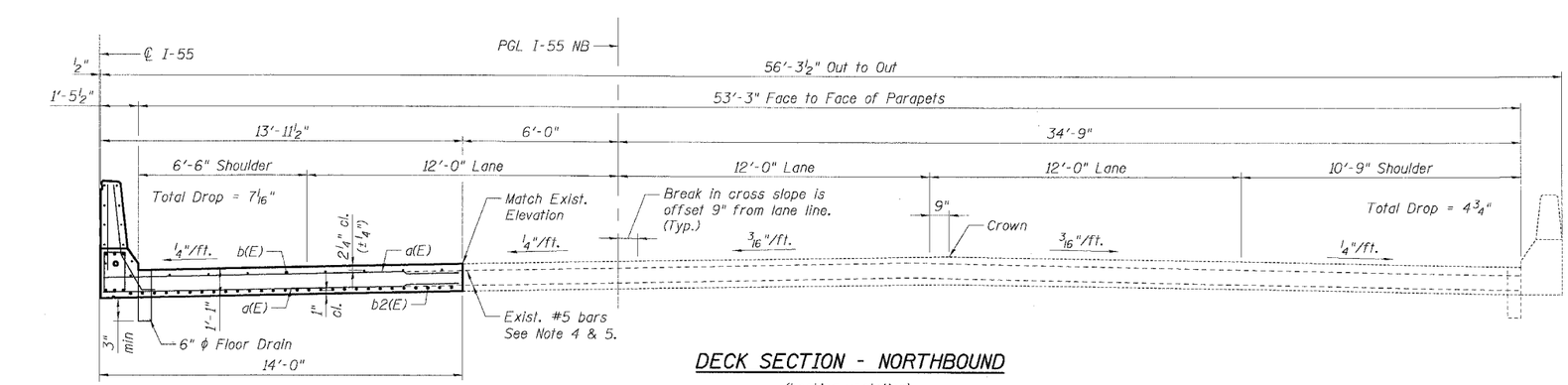

DECK SECTION - NORTHBOUND

(Looking upstation)

Notes:

1. Work this sheet with Shts. SB-5, SB-7, & SB-8.
2. For Sections D-D & E-E, see Sht. SB-5.
   For Section F-F, see Sht. SB-7.
3. See Sht. SB-3 for existing deck slab removal.
4. Existing reinforcement extending out of abutment wall or deck shall be cleaned, straightened, and incorporated into the new construction as indicated. Cost shall be included with Reinforcement Bars, Epoxy Coated.
5. Any reinforcement bars that are damaged during concrete removal shall be replaced with an approved bar splicer or anchorage system. Cost shall be included with Concrete Removal.
6. Reinforcement bars designated (E) shall be epoxy coated.
7. d4(E) and d5(E) bars are billed with abutments.

SHT. SB-6 OF 13

REVISIONS	
NAME	DATE

ILLINOIS DEPARTMENT OF TRANSPORTATION
FAI ROUTE 55 (OVER CSX RR AND SUNNYLAND DRAIN)
BRIDGE WIDENING
NB & SB I-55 OVER SUNNYLAND DRAIN, S.N. 099-0014 & 099-0015
STA. 491+90.44, SECTION 2006-031 BY
WILL COUNTY

NORTHBOUND DECK
DEAD LOAD DEFLECTION DIAGRAM

SCALE: DRAWN BY MDB
DATE 07/07/06 CHECKED BY MJK

TENG
TENG & ASSOCIATES, INC.
ENGINEERS/ARCHITECTS/PLANNERS
CHICAGO, ILLINOIS

PLOT DATE = $DATE$
PLOT TIME = $TIME$
PLOT SCALE = $SCALE$
USER NAME = $USER$

S:\DOCUMENT\02230560\STRUCT\DGN\SUB91A041.SHT
7-05-2006, 8:33:05
GARCIAAZ