STATE OF ILLINOIS
DEPARTMENT OF TRANSPORTATION

ROUTE NO.	SECTION	COUNTY	TOTAL SHEETS	SHEET NO.
FAI-55	**	WILL	505	320
FED. ROAD DIST. NO. 7		ILLINOIS	FED. AID PROJECT-	

SHEET NO. 23
44 SHEETS

** SECTION 2006-032 BY CONTRACT NO. 60B86

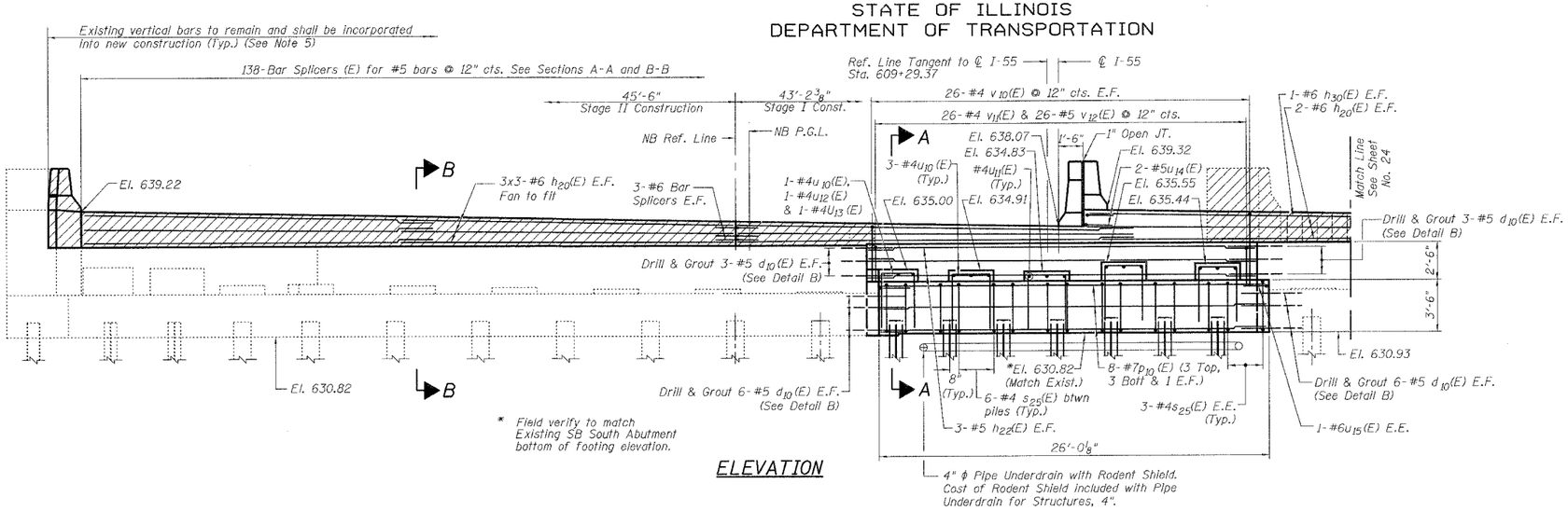

ELEVATION

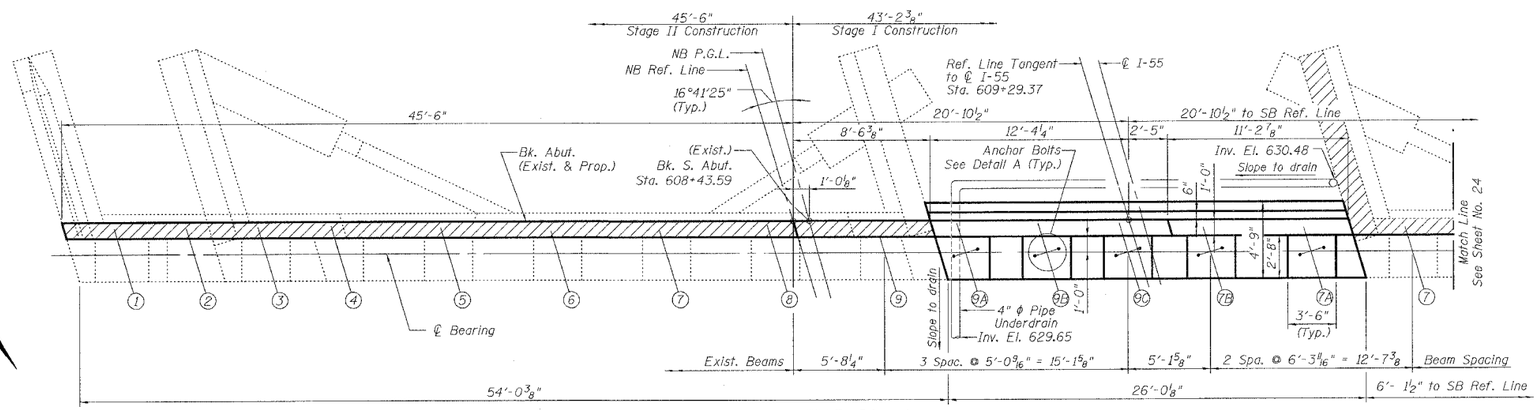

TOP PLAN

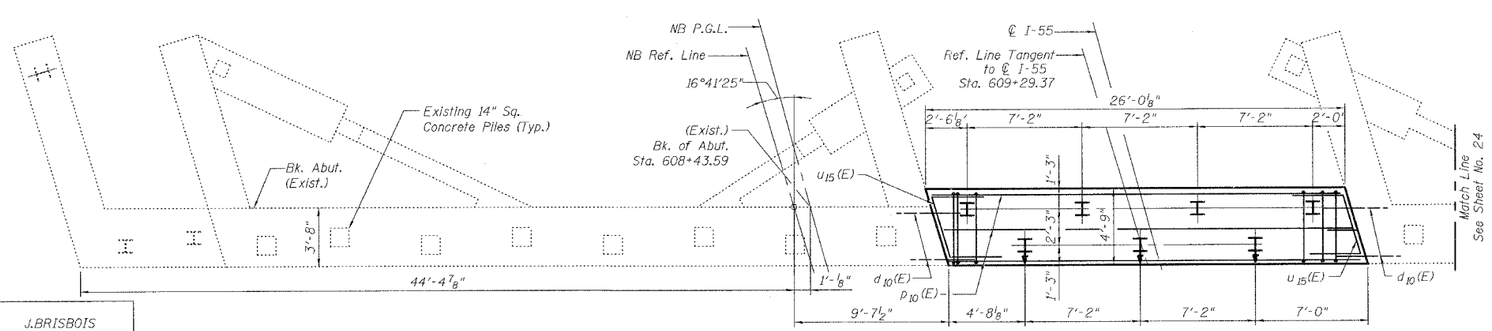

PLAN - PILE CAP

Notes:

1. All exposed edges shall have standard 3/4" chamfers except as noted.
2. Space reinforcement bars in steps to miss anchor bolts.
3. For details of Anchor Bolts, See Sheet No. 35.
4. For details of Bar Splicers, See Sheet No. 36.
5. Existing reinforcement extending into the removal area shall be cleaned, straightened and incorporated into the new construction. Any reinforcement bars that are damaged during concrete removal shall be replaced with an approved bar splicer or anchorage system. Cost shall be included with Concrete Removal.
6. Elevations shown on existing structure were taken from survey data, unless noted otherwise. Contractor shall verify all existing dimensions in field prior to ordering any material.
7. Hatched areas indicate Concrete Removal. See Sheet No. 24 for Concrete Removal Quantity.
8. For Reinforcement Bar Schedule and Bill of Material, See Sheet No. 24.
9. Reinforcement bars designated (E) shall be epoxy coated.
10. Reinforcement bar indicated thus 4x3-#4 etc. indicates 4 lines of bars with 3 equal lengths per line.
11. Work this sheet with Sheet No. 24 and 25.

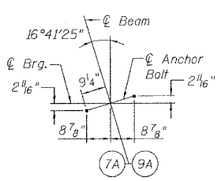

DETAIL A

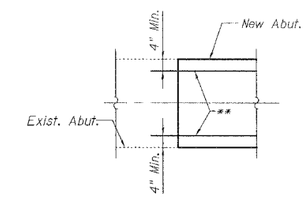

DETAIL B

** Drill and grout #5 d10(E) in 9 in. min. drilled holes according to Section 584 of the Standard Specifications. Method and grout are subject to the approval of the Engineer. Cost included with Reinforcement Bars, Epoxy Coated.

PILE DATA

Type: HP 10x42 with Metal Shoes
Capacity: Driven to refusal
Est. Length: 45'
No. Req'd: 6+1 Test Pile

LEGEND

- Existing Pile
- Existing Concrete Removal
- Proposed Vertical Pile
- Proposed Batter Pile
- E.F. Each Face
- E.E. Each End

MIN. BAR LAPS

#5	2'-2"
#6	2'-7"
#7	3'-5"

DESIGNED	J.BRISBOIS
CHECKED	J.GRAINAWI
DRAWN	Z.MORILLO
CHECKED	J.GRAINAWI

Date: 7/21/2006

PARSONS BRINCKERHOFF

SOUTH ABUTMENT WIDENING I
I-55 OVER EJ&E R.R.
FAI ROUTE 55-SEC. 2006-032 BY
WILL COUNTY
STA. 609+29.37
STRUCTURE NO. 099-0018 (NB)
STRUCTURE NO. 099-0019 (SB)

7/19/2006 5:30:01 PM G:\18817A\Struct\Cadd\Pre-Final\EJ&E RR\Final Bridge Contract\092206-60B86-000-000-023.dgn