STATE OF ILLINOIS
DEPARTMENT OF TRANSPORTATION

ROUTE NO.	SECTION	COUNTY	TOTAL SHEETS	SHEET NO.
94/90	*	COOK	588	276
FED. ROAD DIST. NO. 1	ILLINOIS	FED. AID PROJECT-		

* 62303 (2021-922 PT2 ETC 2324.6-1P) R-11

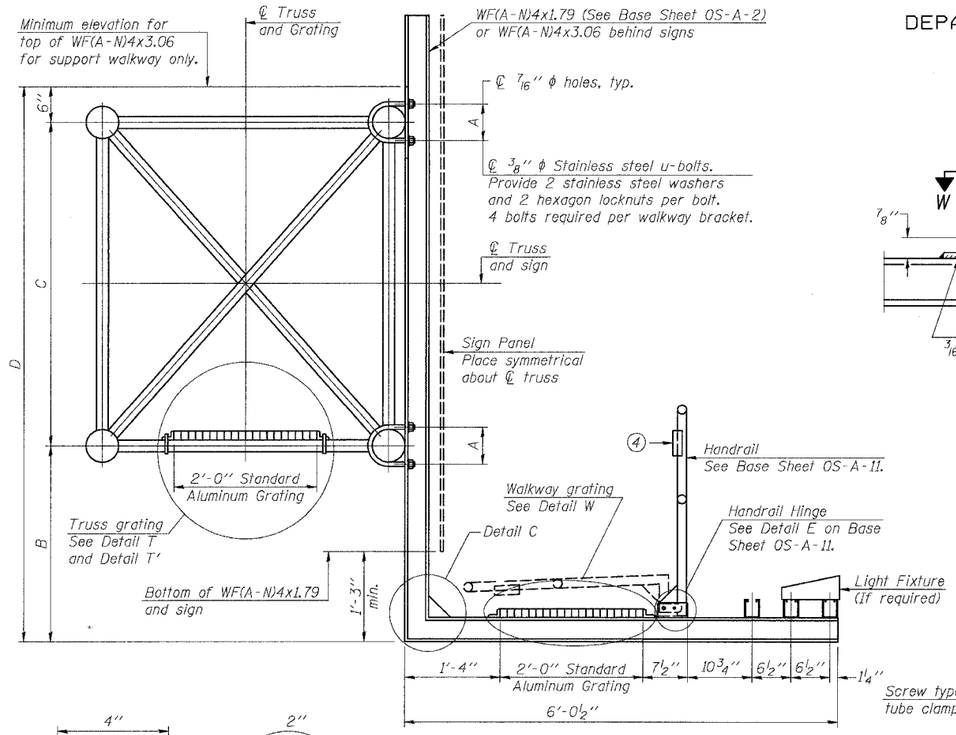

SECTION B-B

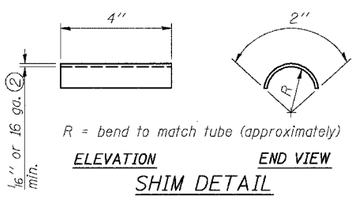

SHIM DETAIL

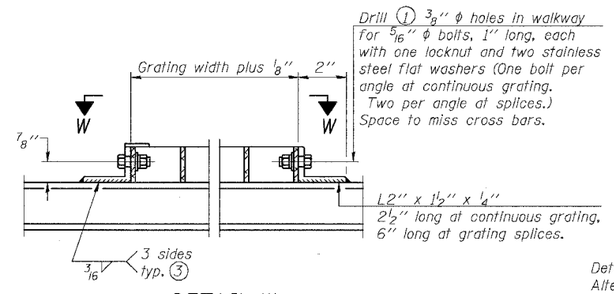

DETAIL W
(Walkway grating)

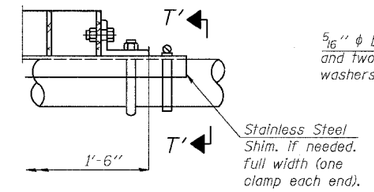

DETAIL T'
(Truss grating splice)
Details not shown same as Detail T.
Alternate materials may be used subject to the Engineer's review and approval.

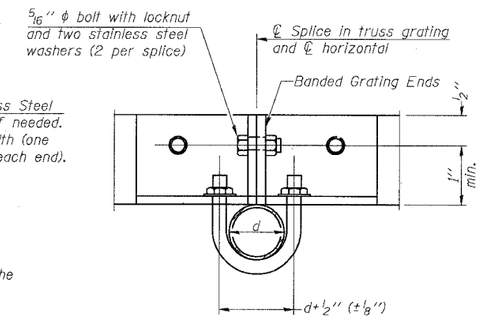

SECTION T'-T'

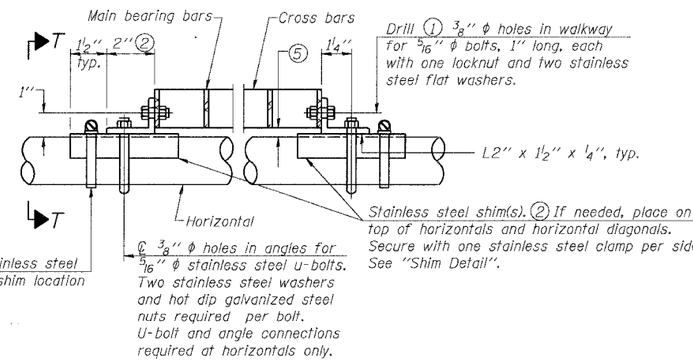

DETAIL T
(Continuous Truss grating)

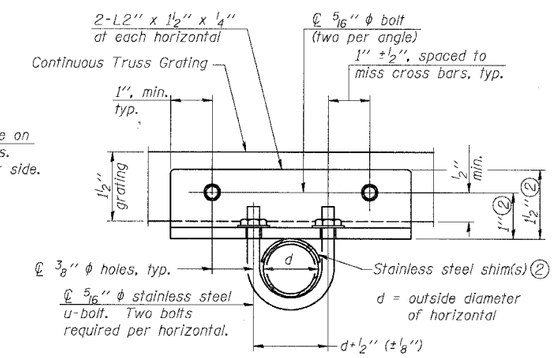

SECTION T-T

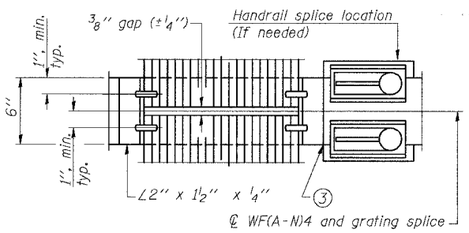

(AT WALKWAY GRATING SPLICE)

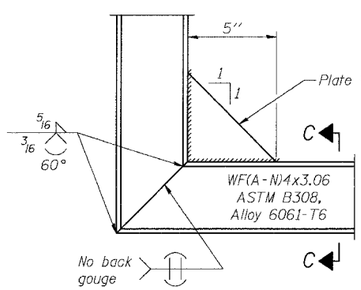

DETAIL C
(See Detail P, Base Sheet OS-A-11.)

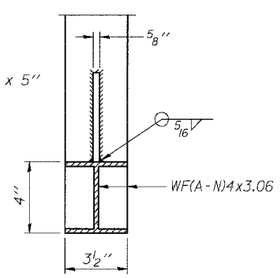

SECTION C-C

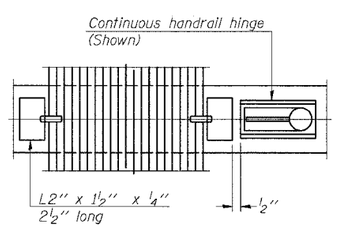

(CONTINUOUS WALKWAY GRATING)

SECTION W-W

SPECIFICATIONS FOR STANDARD ALUMINUM GRATING

Main Bearing Bars shall be 3/16" x 1½" on 1 3/16" centers and conform to ASTM B221 Alloy 6061-T6.

Cross bars shall be 3/16" x 1½" on 4" centers and conform to ASTM B221 Alloy 6063-T5 or 6061-T6.

OR

Aluminum Grating with modified "I" sections for main bearing bars shall meet the following requirements:

Main bars shall conform to ASTM B221 Alloy 6061-T6 and have a minimum section modulus equal to 0.0705 in.³ per bar, a depth of 1½", spaced on 1 3/16" centers.

Cross bars shall conform to ASTM B221 Alloy 6063-T5 or T-42 and spaced on 4" centers.

Structure Number	Station	A	B	C	D
1S016I094R057.1	3511+00	6½"	4'-10½"	5'-3"	10'-7½"
1S016I094R057.4	3493+30	5"	3'-3"	4'-6"	8'-3"
1S016I094R056.8	3524+00	6"	4'-10½"	5'-3"	10'-7½"
1S016I094R056.67	3532+00	5½"	5'-3"	4'-6"	10'-3"
1S016I094R056.47	3543+00	5½"	5'-0"	4'-6"	10'-0"
1S016I094R056.02	3566+30	5½"	5'-0"	4'-6"	10'-0"
1S016I094R055.46	3596+00	5½"	3'-3"	4'-6"	8'-3"
1S016I094R055.08	3616+00	5½"	5'-6"	4'-6"	10'-6"

(1) Drilling holes in grating may be done in shop or field, based on Contractor's preference and subject to accurate alignment.

(2) Stainless steel shims shall be placed as shown in Detail T if needed to compensate for alignment variations between horizontal and diagonal pipes beyond adjustment provided by angles. Thicker shims may be used subject to shims performing properly.

(3) If Handrail Joint present, weld angle to WF*A-N*4 and ¼" extension bars. *See Base Sheet OS-A-11.*

(4) * ⅛" x ½" x 2" welded to handrail posts to protect locations that contact grating.

(5) Tube to grating gap may vary from 0 to ½", max. to align walkway, allow for camber, etc.

SGN-26

DESIGNED	MSA
CHECKED	AS
DRAWN	RV
CHECKED	MSA

20
EXAMINED
ENGINEER OF STRUCTURAL SERVICES
PASSED
ENGINEER OF BRIDGES AND STRUCTURES

NUMBER	REVISION	DATE

OS-A-10 1-7-05

OVERHEAD SIGN STRUCTURES
ALUMINUM WALKWAY DETAILS

ILLINOIS DEPARTMENT OF TRANSPORTATION
F.A.I. 94/90 (DAN RYAN EXPRESSWAY)
GARFIELD BLVD TO 31st STREET (SB LOCAL LANES)

OVERHEAD SIGN STRUCTURES
(SPAN)