F.A.I.	SECTION	COUNTY	TOTAL SHEETS	SHEET NO.
94/90	•	COOK	588	466
STA.		TO STA.		
FED. ROAD DIST. NO.	ILLINOIS	FED. AID PROJECT		

62303 •(2021-922 PT2 ETC 2324.6-1P) R-11

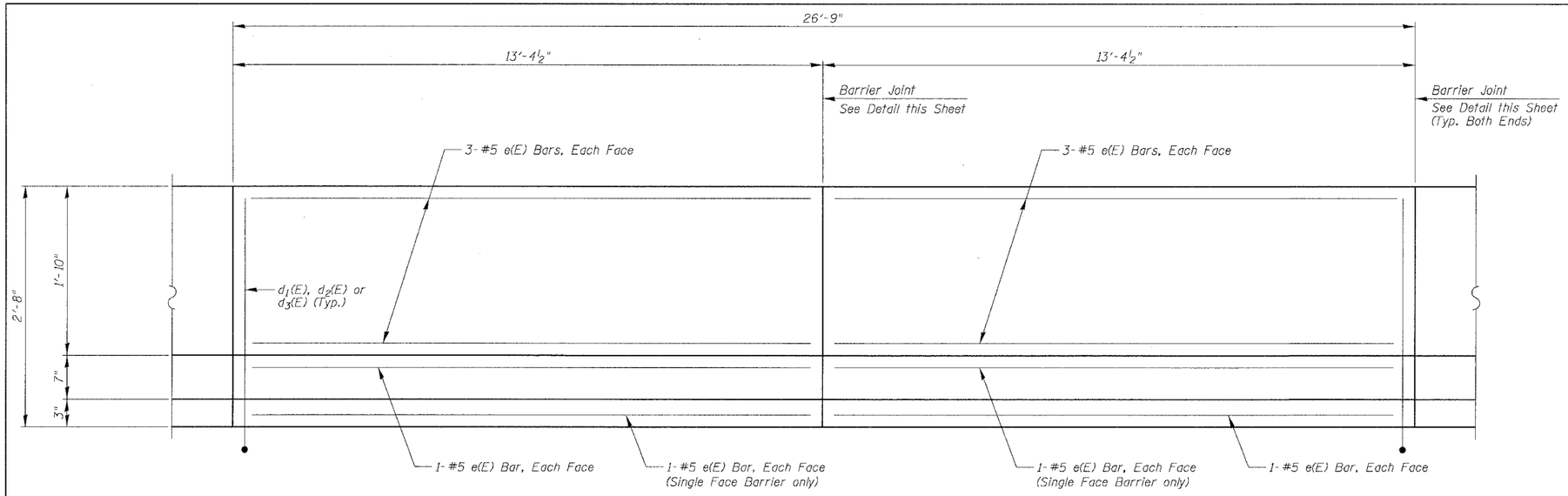

INSIDE ELEVATION OF SINGLE FACE BARRIER

Single Face shown, Double Face similar as noted

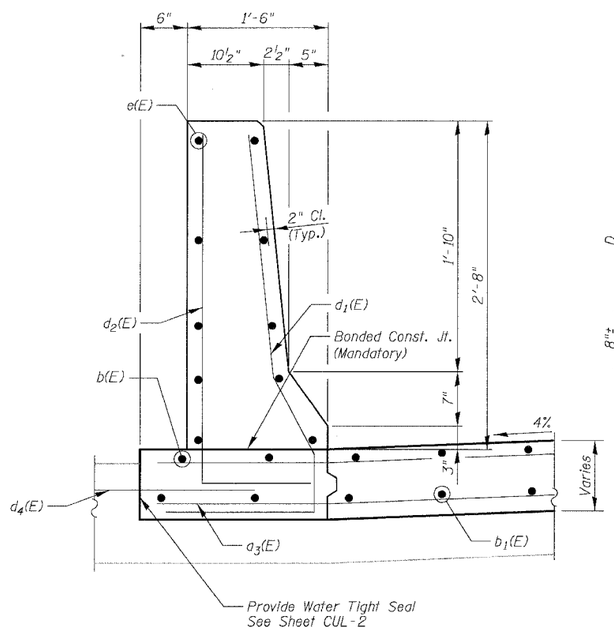

SECTION THRU SINGLE FACE BARRIER

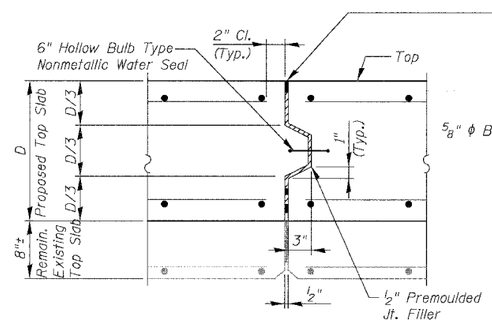

CULVERT EXPANSION JOINT

Do not seal until after grooving operations

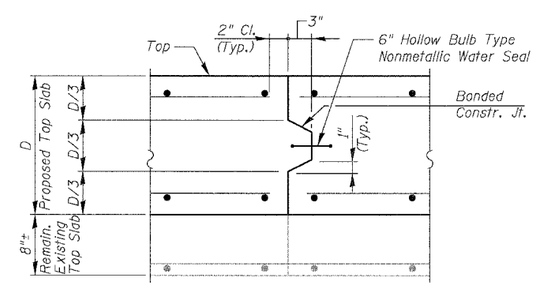

CULVERT CONSTRUCTION JOINT

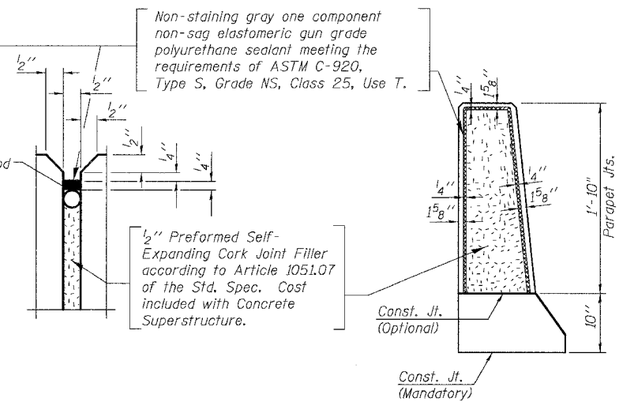

BARRIER JOINT DETAILS

Shown for Single Face Barrier, Double Face similar as required

TOP SLAB BILL OF MATERIAL

Bar	No.	Size	Length	Shape
a(E)	56	#5	35'-8"	
a_1(E)	56	#5	12'-2"	
a_2(E)	56	#5	1'-9"	
b(E)	52	#7	26'-5"	
b_1(E)	52	#7	8'-0"	
b_2(E)	104	#7	28'-1"	
d(E)	26	#6	1'-0"	
d_1(E)	27	#5	5'-2"	
d_2(E)	27	#5	4'-11"	
d_3(E)	54	#5	3'-3"	
d_4(E)	27	#6	1'-9"	
e(E)	32	#5	13'-0"	
Concrete Superstructure			Cu. Yd.	72.8
Bridge Deck Grooving			Sq. Yd.	142
Protective Coat			Sq. Yd.	178
Reinforcement Bars, Epoxy Coated			Pound	13,540
Bar Spilcers			Each	102

Reinforcement bars designated (E) shall be epoxy coated.

Cost of water seal, P.J.F. and Sealant included in the cost of Concrete Superstructure.

See sheet CUL-7 for section thru Double Face Barrier.

Epoxy grout #6d(E) & d_4(E) bars in drilled holes with a depth of 6" (9" for d_4(E)) in accordance with Art. 584 of the std. specs.

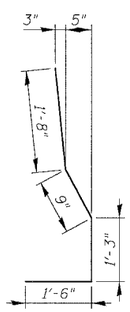

BAR d_1(E)

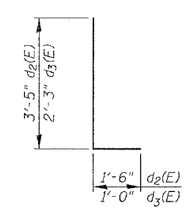

BARS d_2(E) & d_3(E)

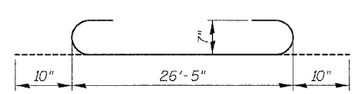

BAR b_2(E)

BOWMAN, BARRETT & ASSOCIATES INC.
CONSULTING ENGINEERS
Chicago, Illinois
312.228.0100
www.bbandainc.com

REVISIONS	
NAME	DATE

SHEET CUL-5 OF CUL-16

ILLINOIS DEPARTMENT OF TRANSPORTATION

F.A.I. 94/90 (DAN RYAN EXPRESSWAY)

GARFIELD BLVD TO 31ST STREET (SB LOCAL LANES)

MWRD CULVERT, N. OF 39TH ST.,
COOK COUNTY, S.N. 016-2625
TOP SLAB DETAILS

SCALE: N.T.S. DRAWN BY: MTR

DATE: JUNE 9, 2006 CHECKED BY: BLU

6/8/2006 8:33:09 AM

n:\660\proj\Culvert\N\660_CUL01.dgn