STATE OF ILLINOIS
DEPARTMENT OF TRANSPORTATION

ROUTE NO.	SECTION	COUNTY	TOTAL SHEETS	SHEET NO.
FAP 332	47BR-2	VERMILION	68	34
FED. ROAD DIST. NO. 7		ILLINOIS	FED. AID PROJECT-	

SHEET NO. 15
23 SHEETS

Contract #70420

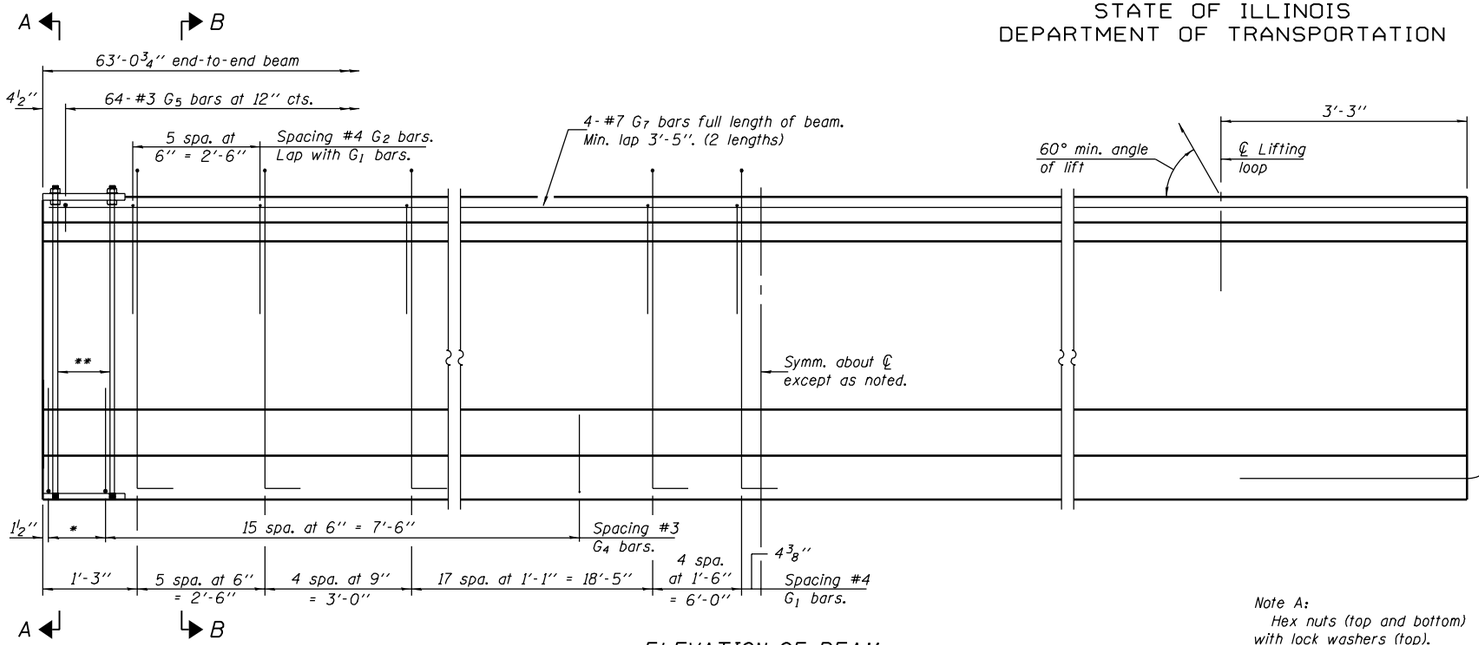

* 3 spaces at 3'' = 9''.
** 4-3/4'' ϕ threaded dowel rods at 3'' cts., each face.

ELEVATION OF BEAM
(Showing reinforcement & dimensions)

Note A:
Hex nuts (top and bottom) with lock washers (top). Only tighten sufficiently to compress lock washers.

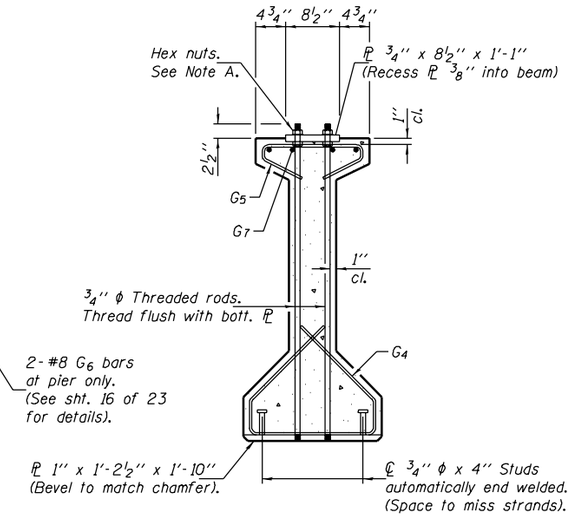

SECTION A-A

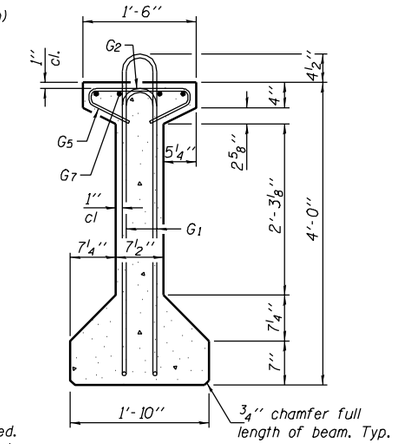

SECTION B-B

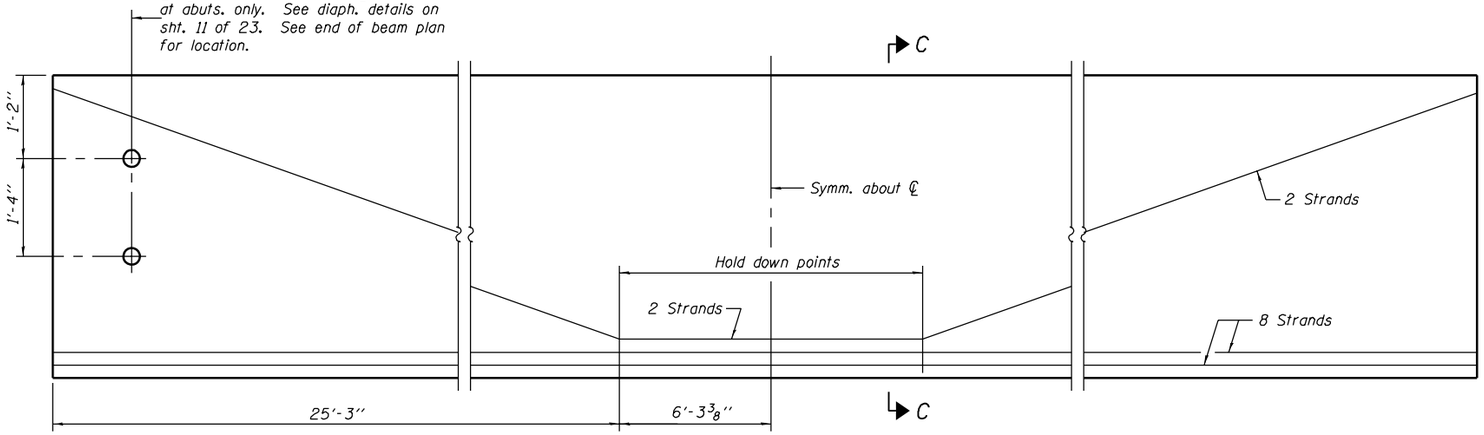

ELEVATION OF BEAM
(Showing prestressing steel)

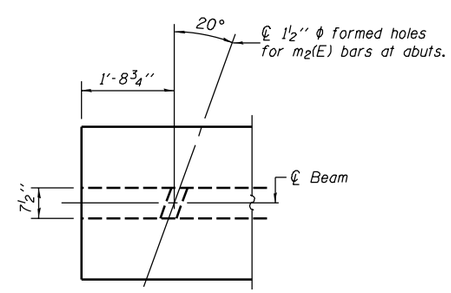

END OF BEAM - PLAN

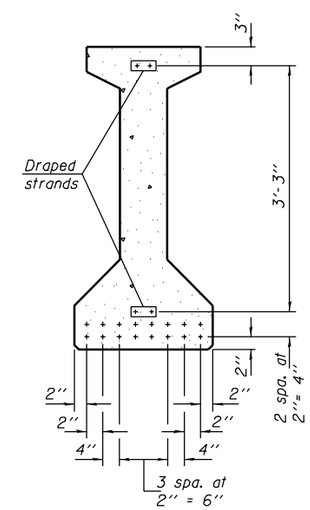

SECTION C-C

BAR LIST
ONE BEAM ONLY

Bar	No.	Size	Length	Shape
G_1	62	#4	9'-6''	
G_2	12	#4	5'-1''	
G_4	32	#3	5'-3''	
G_5	64	#3	2'-9''	
G_6	2	#8	3'-9''	
G_7	8	#7	33'-3''	

Notes: See sheet 16 of 23 for additional details and Bill of Material.
Required release strength, f'ci, shall be 5000 psi.

DESIGNED	D. P. Narielwala
CHECKED	S. M. Ryan
DRAWN	h.t. duong
CHECKED	DPN/SMR

August 4, 2006
EXAMINED Thomas J. Domagalski
ENGINEER OF BRIDGE DESIGN
PASSED Ralph E. Anderson
ENGINEER OF BRIDGES AND STRUCTURES

48'' PPC I-BEAM (SPAN 2)
F.A.P. RTE. 332 - SEC. 47BR-2
VERMILION COUNTY
STATION 2522+72.00
STRUCTURE NO. 092-0206