| F.A. RTE. | SECTION | COUNTY | TOTAL SHEETS | SHEET NO. |
|---|---|---|---|---|
| 42 | 101RS-6 | MONTGOMERY | 16 | 12 |
| STA. | | TO STA. | | |
| FED. ROAD DIST. NO. | ILLINOIS | FED. AID PROJECT | | |

CONTRACT NO. 72816

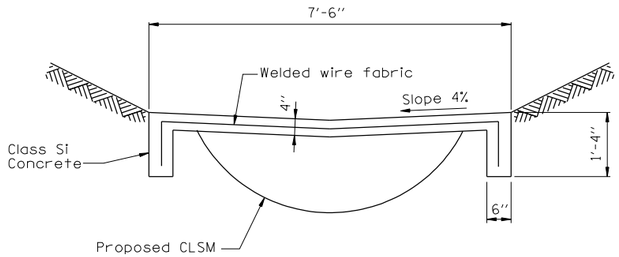


SECTION C-C

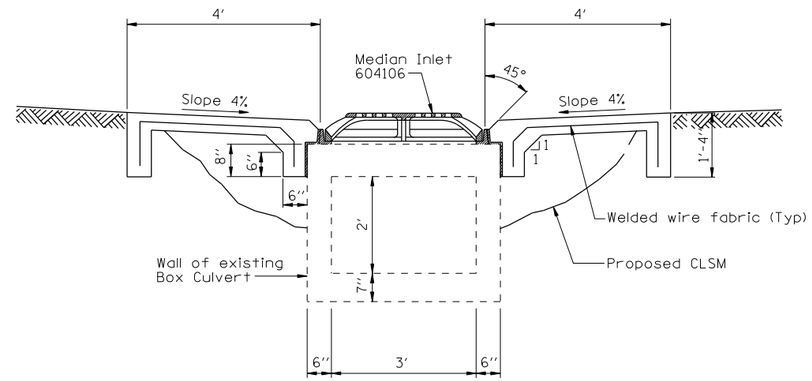


SECTION B-B

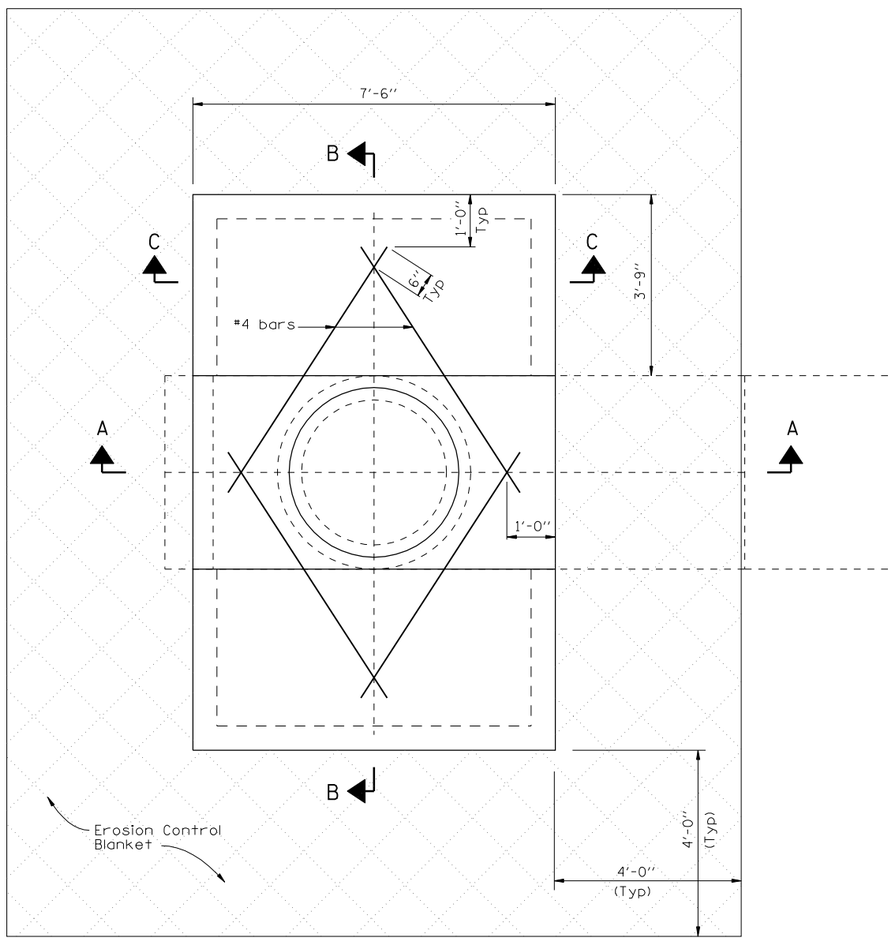


LOCATION SKETCH - PLAN

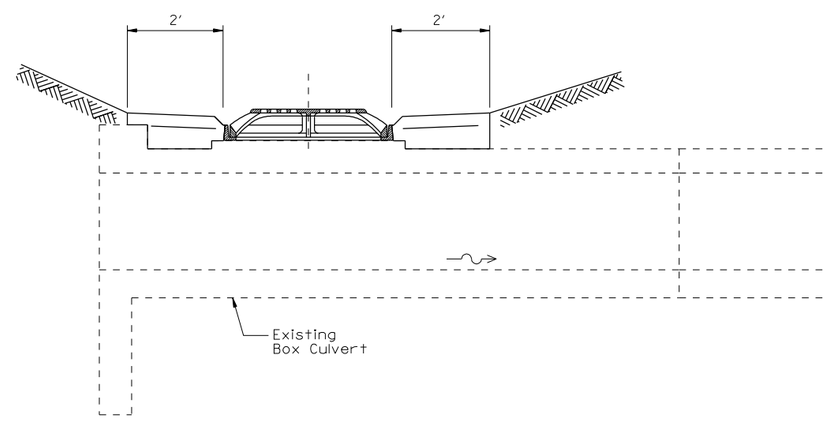


SECTION A-A

## GENERAL NOTES

1. THE CONTRACTOR SHALL REMOVE AND DISPOSE OF THE EXISTING MEDIAN INLET AND CONCRETE APRON AT STA 941+54.5 LEFT.
2. THE CONTRACTOR SHALL PLACE CLSM AT THE LOCATIONS INDICATED IN ACCORDANCE WITH THE STANDARD SPECIFICATIONS.
3. THE WELDED WIRE FABRIC SHALL CONFORM TO ARTICLE 604.04 FOR MEDIAN INLET STANDARD 604106.
4. THE CONTRACTOR SHALL RE-GRADE THE DISTURBED AREA, SEED THE AREA WITH CLASS I MIXTURE AND PLACE EROSION CONTROL BLANKET AS INDICATED. SEEDING & FERTILIZER WILL NOT BE PAID FOR SEPARATELY.
5. THIS WORK SHALL BE PAID FOR AT THE CONTRACT UNIT PRICE PER EACH DRAINAGE STRUCTURES TO BE RECONSTRUCTED WHICH PRICE SHALL INCLUDE ALL LABOR AND MATERIALS NECESSARY TO COMPLETE THE WORK AS DETAILED AND NO ADDITIONAL COMPENSATION WILL BE ALLOWED. CLSM WILL NOT BE PAID FOR SEPARATELY.

| REVISIONS | |
|---|---|
| NAME | DATE |
| | |
| | |
| | |
| | |
| | |
| | |

ILLINOIS DEPARTMENT OF TRANSPORTATION

FAP ROUTE 42 (IL 48 / IL 127)
SECTION 101RS-6
MONTGOMERY COUNTY

DRAINAGE DETAIL

DRAWN BY: DLB CHECKED BY: CAS

| PLAN | BY | DATE |
|---|---|---|
| SURVEYED | | |
| PLOTTED | | |
| ALIGNMENT CHECKED | | |
| RT. OF WAY CHECKED | | |
| CADD FILE NAME | | |
| NOTE BOOK NO. | | |

$$DATE$$
$CONTYPE$
$DGN-SPEC$
$REF-
$REF-