ROUTE	SECTION	COUNTY	TOTAL SHEETS	SHEET NO.
*	**	***	52	11
STA.		TO STA.		
FED. ROAD DIST. NO. _	ILLINOIS	FED. AID PROJECT		

* FAI 55/70 CONTRACT# 76973
** DIST 8 ITS 2006-2
*** MADISON & ST. CLAIR & CITY OF ST. LOUIS, MO

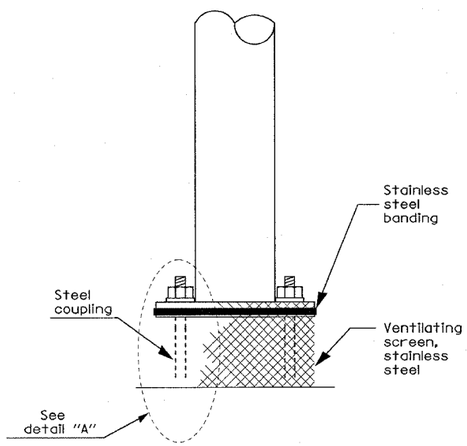

BREAKAWAY COUPLING

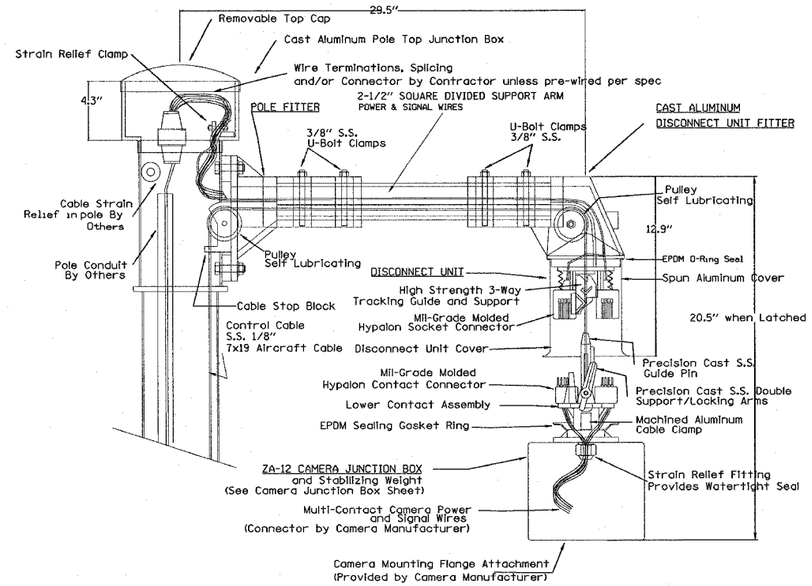

Camera Lowering Device for Pole Mounting Multi-Function Surveillance Cameras CLDMG2-HYP-045-ST-D

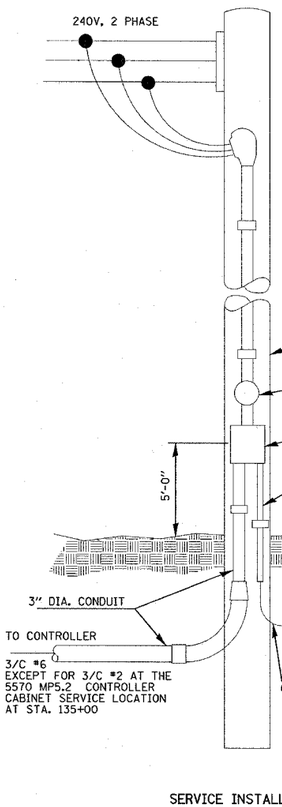

SERVICE INSTALLATION TYPE A

NOT TO SCALE

NO. 6 BARE COPPER WIRE

ANCHOR BOLT SHALL EXTEND THROUGH NUT 3/8" TO 1". USE SELF-LOCKING NUT AND FLAT WASHER. DO NOT USE LOCK-WASHER. LENGTH ABOVE FOUNDATION SHALL BE ADJUSTED WHEN BREAKAWAY DEVICES ARE USED.

1"Ø STEEL ANCHOR BOLTS THREADED 4"+ AND HOT DIP GALVANIZED 9" ±1". 4" ±1" HOOK ON THE OTHER END. SEE NOTE III.

NOTE:

USE DIRT REMOVED FROM FOUNDATION TO FILL AROUND FOUNDATION TOP. MAKE TOP OF DIRT LEVEL WITH TOP OF CONCRETE. ANY EXCESS DIRT WILL BE DISPOSED OF BY THE CONTRACTOR AT HIS EXPENSE.

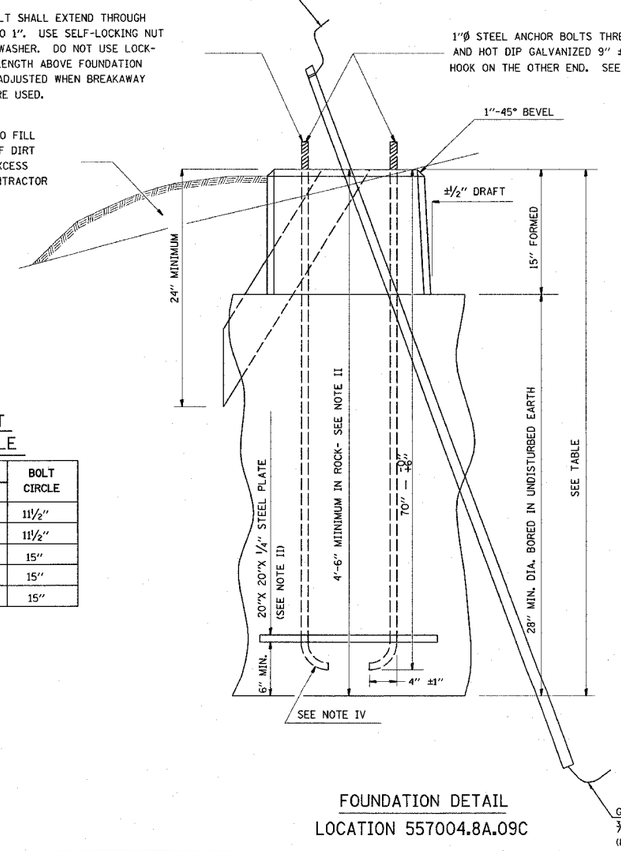

FOUNDATION DETAIL
LOCATION 557004.8A.09C

LOW MOUNT
DESIGN TABLE

MOUNTING FOUNDATION		BOLT CIRCLE
HEIGHT	DEPTH	
30' OR LESS	5'-0"	11 1/2"
31'-35'	6'-0"	11 1/2"
36'-40'	7'-0"	15"
* 41'-45'	7'-6"	15"
46'-50'	8'-0"	15"

NOTE:

AFTER POURING CONCRETE, THE FORM SHALL REMAIN UNDISTURBED OVERNIGHT.

THE TOP 15" ONLY SHALL BE FORMED. CONCRETE BOUNDED BY UNDISTURBED EARTH ONLY SHALL FILL THE REMAINDER OF THE HOLE.

NOTE I:

MINIMUM CLEARANCE FROM THE OUTSIDE EDGE OF FOUNDATION TO ANY PART OF THE POLE BASEPLATE SHALL BE 2".

NOTE II:

THE DEPTH OF THE FOUNDATION MAY BE REDUCED 6" FOR EVERY FOOT OF ROCK ENCOUNTERED WITH A MINIMUM DEPTH OF 4'-6". WHEN THE DEPTH OF THE FOUNDATION IS DECREASED TO LESS THAN 6'-0", THE ANCHOR BOLTS SHALL BE CUT, THREADED, AND A STEEL PLATE 20"X 20"X 1/4" SHALL BE INSTALLED ON THE ANCHOR BOLTS 6" ABOVE THE BOTTOM OF THE EXCAVATION. THE COST SHALL BE INCIDENTAL TO THE FOUNDATION.

NOTE III:

ON PARAPET WALLS USE 1 1/4"Ø ANCHOR BOLTS. USE SELF-LOCKING NUT AND FLAT WASHER. DO NOT USE LOCKWASHER. (FOR DETAILS SEE STANDARD III/2.35 OF BRIDGE DESIGN MANUAL.

NOTE IV:

BEND RADIUS SHALL BE FOUR TIMES BOLT DIAMETER.

NOTE V:

CONNECT GROUND WIRES TO POLE BASE GROUND LUG, NOT ANCHOR BOLTS OR TRANSFORMER BASE.

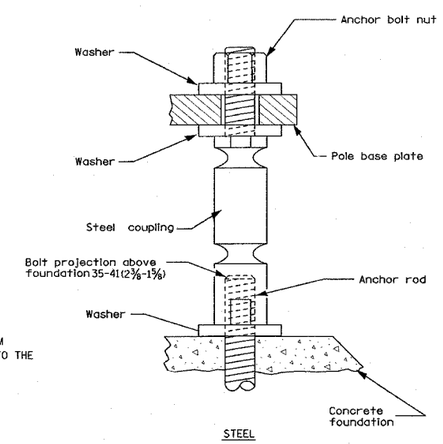

STEEL

Installation Instructions:

Screw couplings onto anchor bolts to end of threads. Very important to level couplings to avoid over stressing and either cracking or stripping of the threads within the coupling.

DETAIL A

TYPICAL COUPLING FOR CONCRETE FOUNDATION

REVISIONS	
NAME	DATE

ILLINOIS DEPARTMENT OF TRANSPORTATION
SERVICE INSTALLATION AND
POLE MOUNTED CCTV DETAIL WITH
CAMERA LOWERING DEVICE (SHEET 1 OF 3)
DETAILS
FAI 55/70
SECTION DIST 8 ITS 2006-2
MADISON AND ST. CLAIR COUNTY
AND ST. LOUIS, MO

DATE 6/15/2006

PLOT DATE = 6/15/2006
FILE NAME = c:\projects\edi16895\electrical\tsplan16895a.dgn
PLOT SCALE = 1000.0043 ' / IN.
REFERENCE = REF