ROUTE	SECTION	COUNTY	TOTAL SHEETS	SHEET NO.
*	**	***	52	43
STA.		TO STA.		
FED. ROAD DIST. NO. _	ILLINOIS	FED. AID PROJECT		

* FAI 55/70 CONTRACT# 76973
** DIST 8 ITS 2006-2
*** MADISON & ST. CLAIR & CITY OF ST. LOUIS, MO

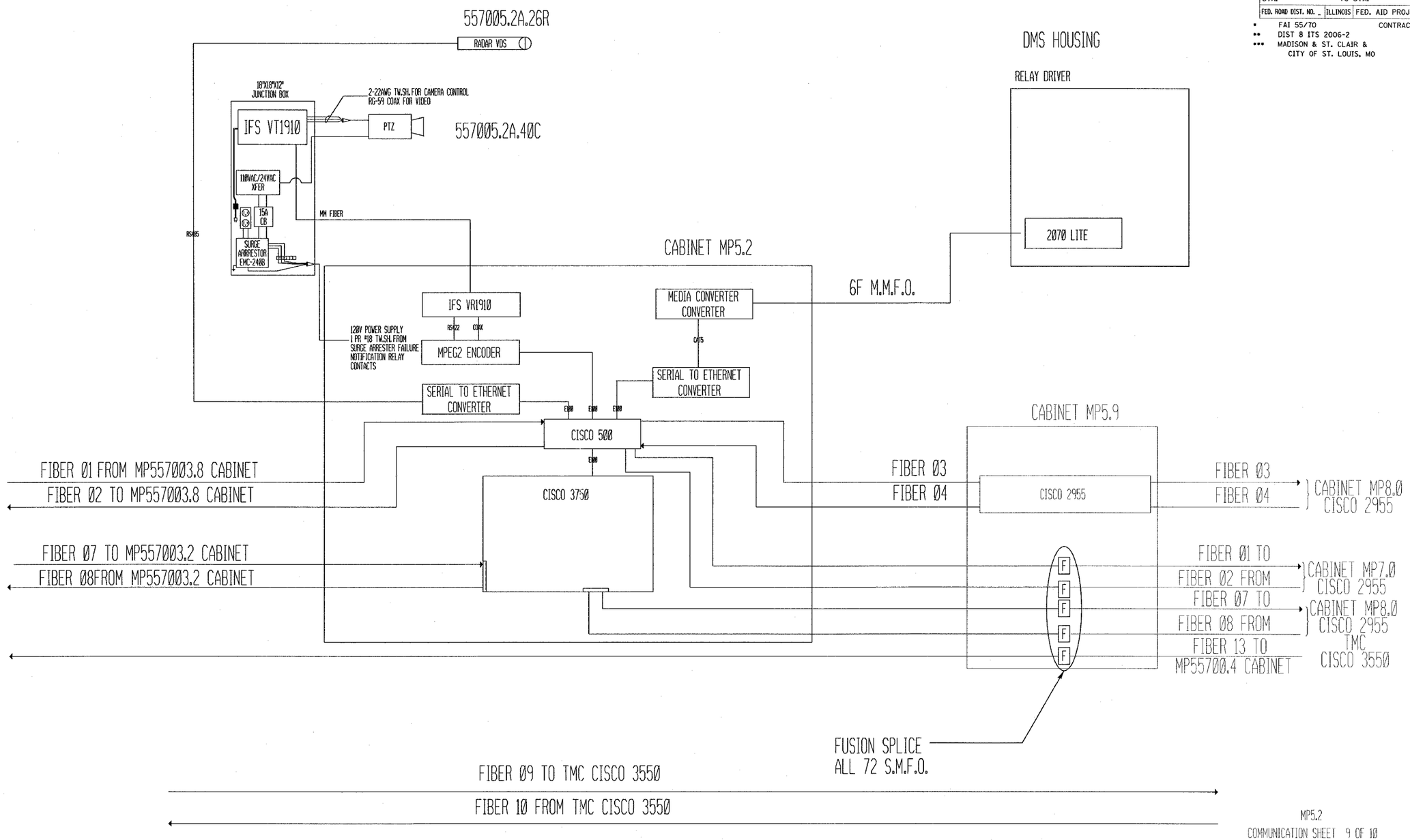

MP5.2
COMMUNICATION SHEET 9 OF 10

REVISIONS	
NAME	DATE

ILLINOIS DEPARTMENT OF TRANSPORTATION

1.I55/70 CABINET MP5.2
557005.2A.40C
557005.2W.08S

FAI 55/70
SECTION DIST 8 ITS 2006-2
MADISON AND ST. CLAIR COUNTY
AND ST. LOUIS, MO

SCALE: DRAWN BY MAM
DATE 8/10/2006 CHECKED BY CAF

PLOT DATE = 8/10/2006
FILE NAME = c:\projects\edi1605\electrical\itspln11605a.dgn
PLOT SCALE = 100.0042 ' / IN.
REFERENCE = REF