F.A.I. RTE.	SECTION	COUNTY	TOTAL SHEETS	SHEET NO.
94/90 *		COOK	556	403
STA.		TO STA.		
FED. ROAD DIST. NO.	ILLINOIS	FED. AID PROJECT		

62300 * (1818, ETC. 2324.6-1PIR-8

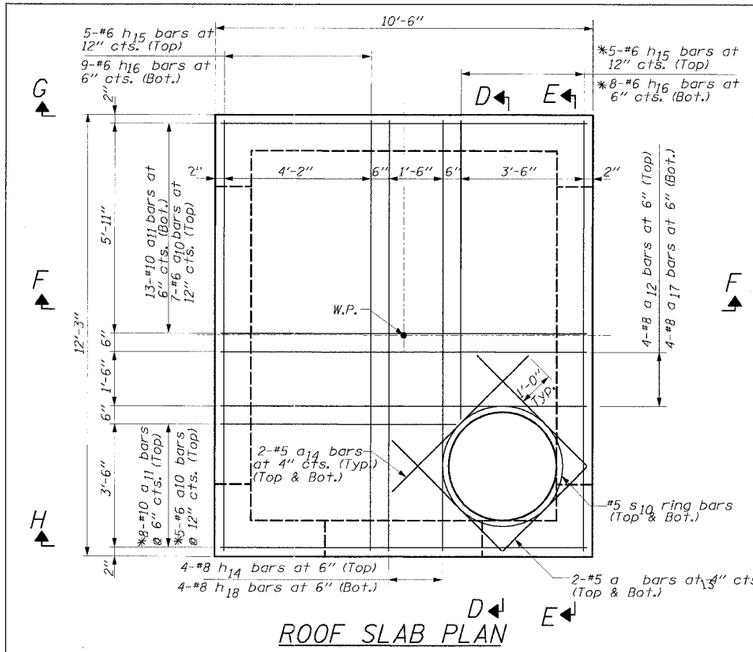

ROOF SLAB PLAN

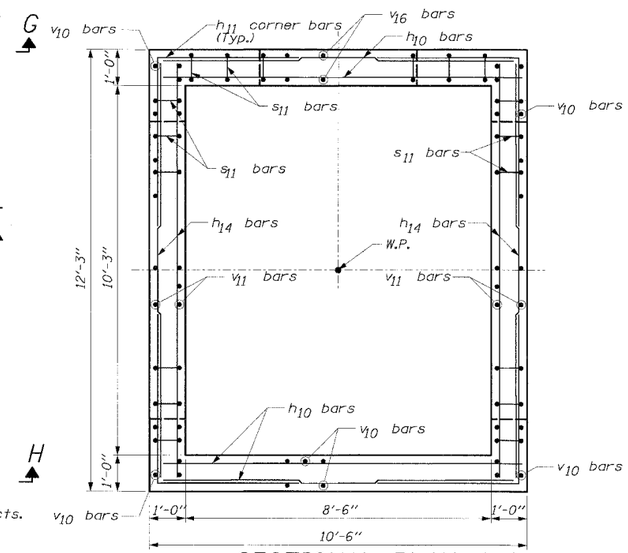

SECTIONAL PLAN J-J

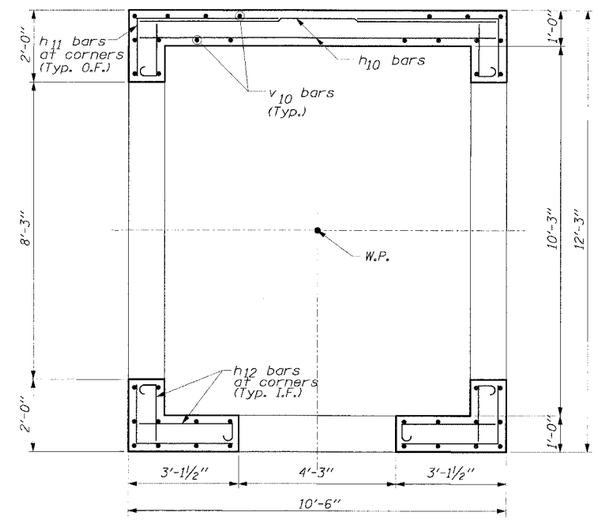

SECTIONAL PLAN K-K

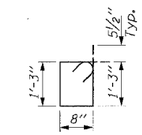

BAR s11

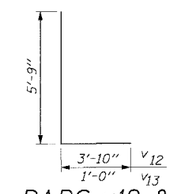

BARS v12 & v13

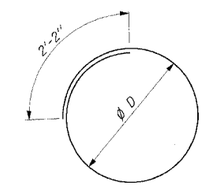

BARS s10 & s13

Bar	Ø D
s_{10}	3'-4"
s_{13}	5'-3"

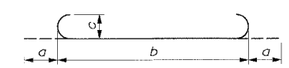

BARS a11, a17, h16 & h18

Bar	a	b	c
a_{11}	8"	10'-2"	6"
a_{17}	11"	10'-2"	8"
h_{16}	8"	11'-11"	6"
h_{18}	11''''	11'-11"	8"

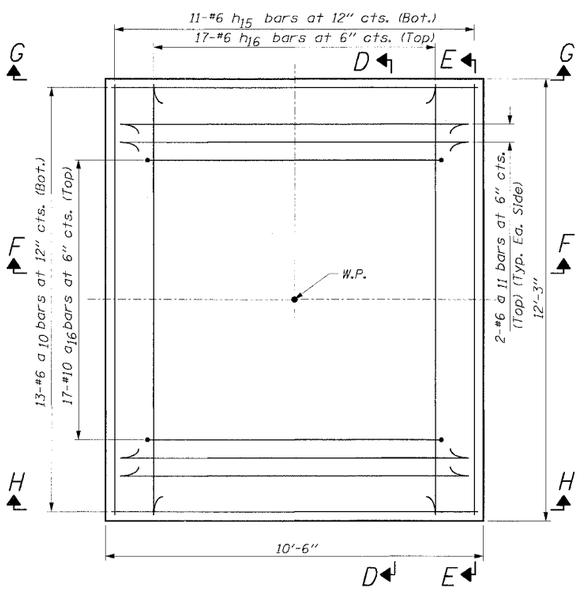

BOTTOM SLAB PLAN

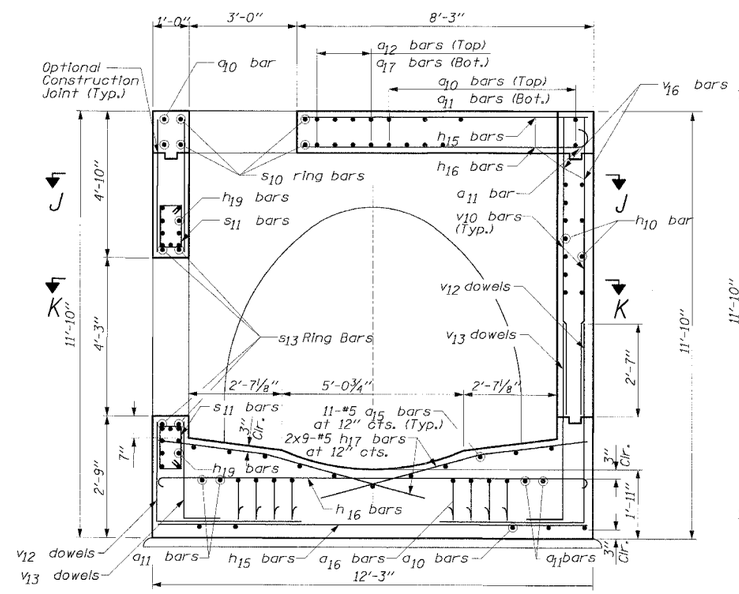

SECTION D-D

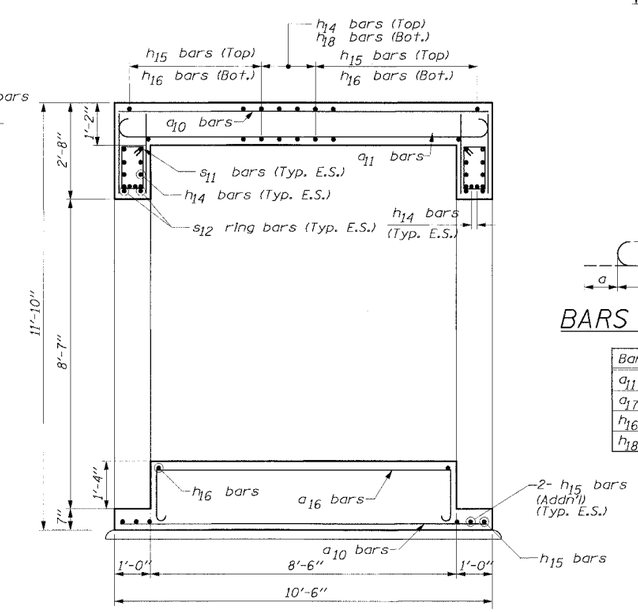

SECTION F-F

NOTES:

1. All dimensions and elevations shall be field verified prior to construction.
2. Concrete pipe sizes shall be coordinated with openings provided into junction chamber before pouring concrete.
3. Manhole Frame, Ladder Rungs, and any inserts installation shall be coordinated with Roadway Plans.
4. Concrete cover for reinforcement steel to be 2" unless otherwise noted.
5. All concrete edges shall be chamfered 1 inch.
6. All lap splices marked on the drawings are minimum.
7. Concrete Compressive Strength fc' = 3,500 psi.
8. Steel Yield Strength = 60,000 psi.
9. Work this Sheet with other 2 Junction Chamber Sheets.

* Cut bars to fit in field.
E.F. - denotes Each Face
E.S. - denotes Each Side
I.F. - denotes Inside Face
O.F. - denotes Outside Face

Edwards AND Kelcey
ONE NORTH FRANKLIN
CHICAGO, IL 60606
PHONE: (312) 251-3000
FAX: (312) 251-3015
WEB: WWW.EKCORP.COM

REVISIONS	
NAME	DATE

ILLINOIS DEPARTMENT OF TRANSPORTATION

F.A.I. 94/90 (DAN RYAN EXPRESSWAY)
31ST STREET TO 71ST STREET
NB EXPRESS LANE RECONSTRUCTION

JUNCTION CHAMBER 7-01
DETAIL 1

SCALE:
DATE: 7/7/05
DRAWN BY: JRW
CHECKED BY: EL

p:\03009\035\Con 148/15\ADD\Adj\403T2b.Sht
06/24/2005 04:16:27 PM