ROUTE NO.	SECTION	COUNTY	TOTAL SHEETS	SHEET NO.
FAI 90/94	*	COOK	419	213
FED. ROAD DIST. NO.		ILLINOIS	FED. AID PROJECT-	

SHEET NO. 2
8 SHEETS

* 2005 - 008F
Contract #62580

STATE OF ILLINOIS
DEPARTMENT OF TRANSPORTATION

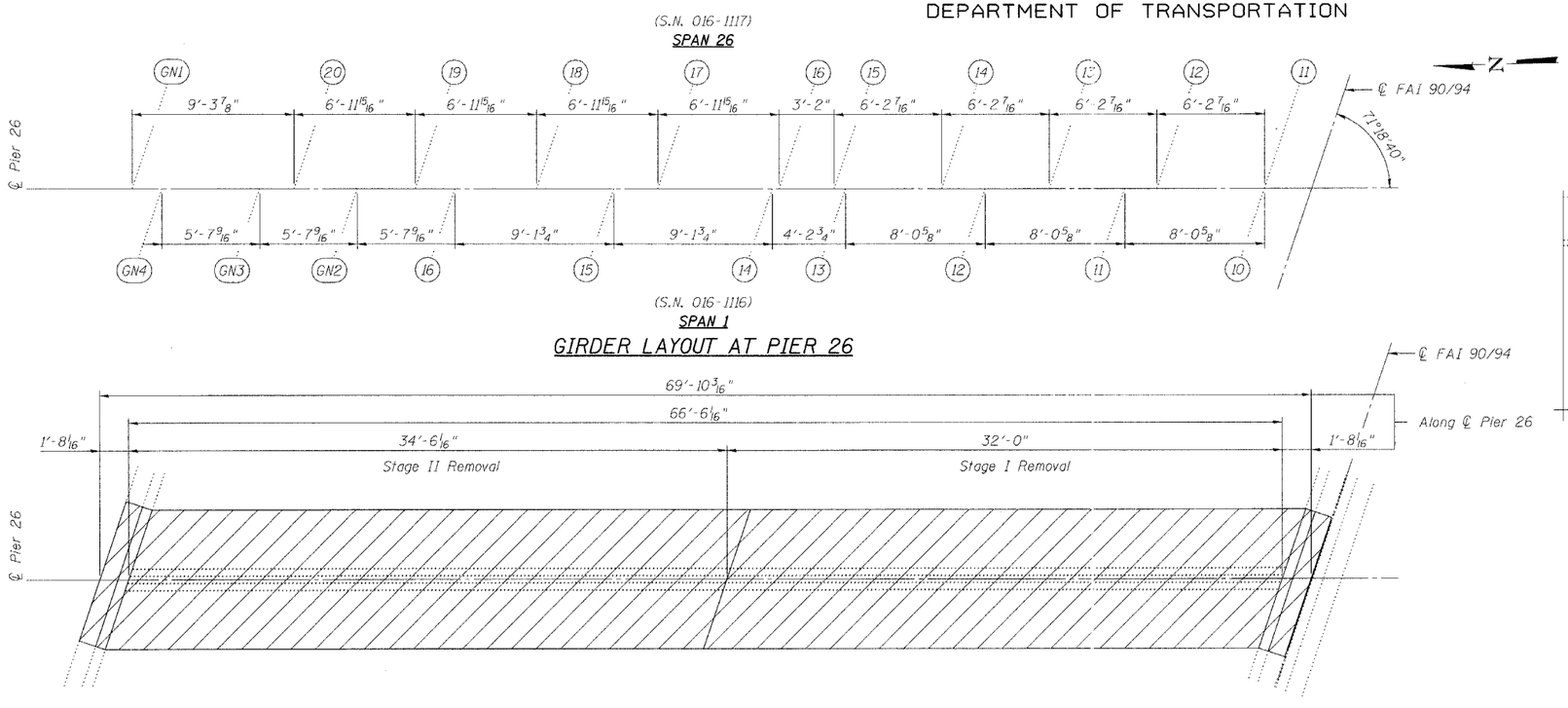

GIRDER LAYOUT AT PIER 26

JOINT REMOVAL PLAN AT PIER 26

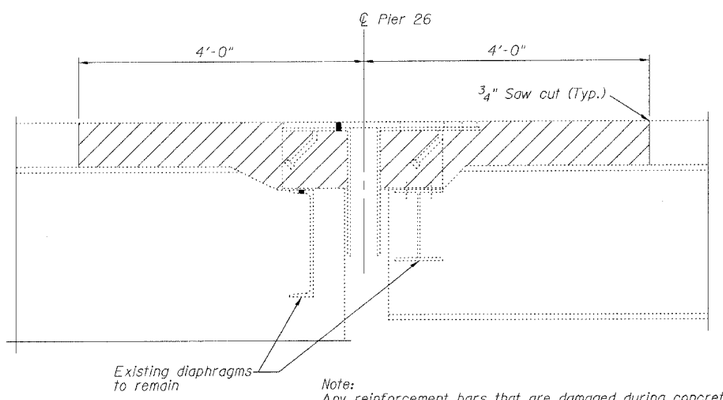

Note:
Any reinforcement bars that are damaged during concrete removal operations shall be repaired or replaced using an approved bar splicer or anchorage system. Cost included with "Concrete Removal".

Existing finger plates, stools, drainage trough and hardware shall be removed. Cost included with "Concrete Removal".

SECTION AT EXISTING FINGER PLATE

(Dimensions at Rt. L's)

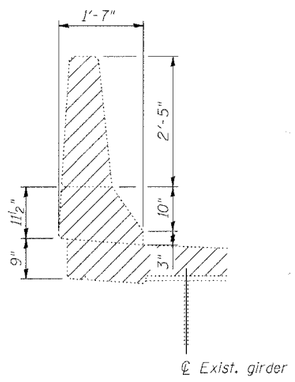

DETAIL AT EXISTING OUTSIDE PARAPET

(Dimensions at Rt. L's)

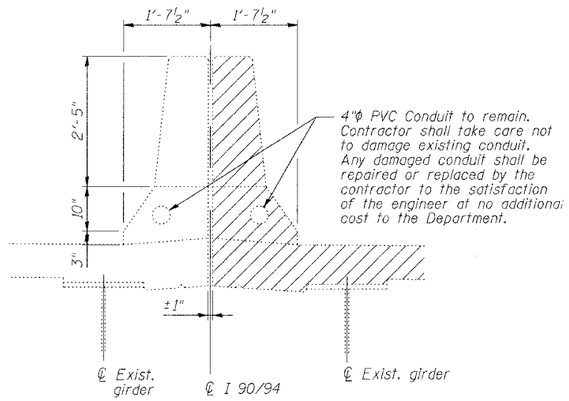

DETAIL AT EXISTING ℄ FAI 90/94 MEDIAN PARAPET

(Dimensions at Rt. L's)

Notes:

Hatched Area indicates "Concrete Removal".
Existing transverse bars in the deck are placed at right angles to ℄ Roadway. Existing transverse bars extending into removal areas shall be cut to miss the new finger joint, cleaned and incorporated into the new construction.
Longitudinal reinforcement extending into removal areas shall be cleaned, straightened and incorporated into the new construction except as noted on Section A-A on Sheet 5.

REVISIONS	
NAME	DATE

ILLINOIS DEPARTMENT OF TRANSPORTATION
FINGER PLATE EXPANSION JOINT REMOVAL DETAILS
F.A.I. ROUTE 90/94 NORTHBOUND (DAN RYAN EXPRESSWAY)
OVER 28th ST. TO S. STEWART ST.
COOK COUNTY
S.N. 016-1117 - PIER 26

SCALE: VERT. HORIZ.
DATE: 2/17/05
DRAWN BY: HEBERLING
DESIGNED BY: SANFORD
CHECKED BY: -

GREENE & BRADFORD, INC.
OF SPRINGFIELD
CONSULTING ENGINEERS
300 CONSTITUTION DRIVE
SPRINGFIELD, ILLINOIS 62711
PROFESSIONAL DESIGN FIRM NO. 184-000175
PROFESSIONAL ENGINEERING CORPORATION
(217) 753-5544, (217) 753-6277 FILE NAME - greenebradford@gbradford.com

COMPUTER FILE NO. 04286-W03-REM
PROJECT 04286-W03
8/3/05-MML

FILE NAME = $FILE$
PLOT SCALE = $pltscale$ DRV = $PLOTTER$
PLOT DATE = 8/3/2005
PLOT TIME = 9:46:53 AM
OPERATOR = michellel