	SECTION	COUNTY	TOTAL SHEETS	SHEET NO.
	2005-020I	COOK	16	16
STA.		TO STA.		
FED. ROAD DIST. NO. _	ILLINOIS	FED. AID PROJECT		

62947

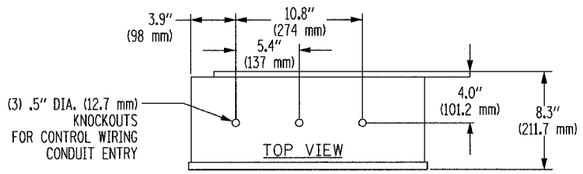

TOP VIEW

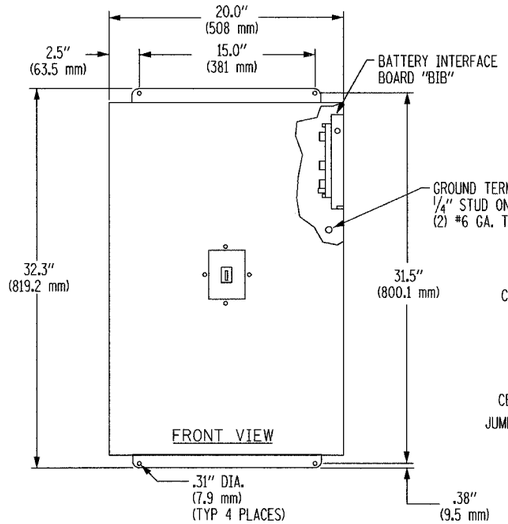

FRONT VIEW

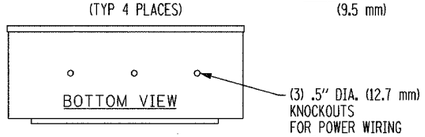

BOTTOM VIEW

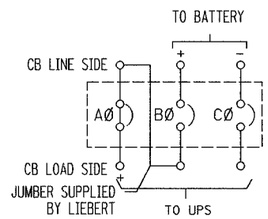

TWO POLE CONFIGURATION

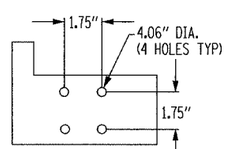

CB LOAD SIDE
BUS BAR DETAIL

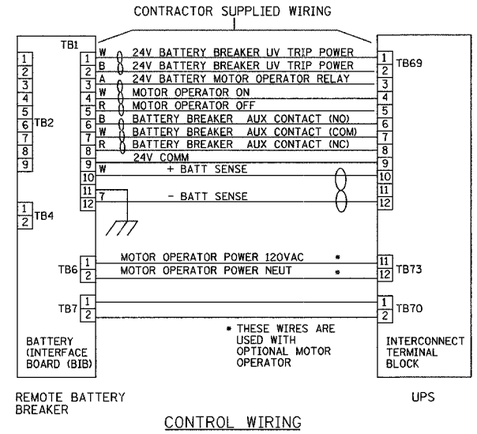

CONTROL WIRING

NOTES

1. NEMA 1 ENCLOSURE PROVIDED IS SUITABLE FOR WALL MOUNTING ONLY. APPROX. WEIGHT IS 60 LB.
2. HARDWARE FOR CONNECTING CABLES TO THE BREAKER SUPPLIED.
3. CIRCUIT BREAKER, SQUARE D TYPE KHL36XXX FOR 40KVA. C.B. TO BE SUPPLIED BY MANUFACTURER.
4. COLOR: IBM OFF-WHITE.
5. MOUNT ENCLOSURE AND PULL ALL CABLES INTO ENCLOSURE PRIOR TO INSTALLING "BIB" BOARD.
6. NUMBER NOT USED.
7. POSITIVE AND NEGATIVE DC POWER CABLES NEED TO ENTER FROM THE BOTTOM OF THE ENCLOSURE TO PREVENT CONTACT WITH THE "BIB" BOARD.
8. LOW VOLTAGE WIRING NEED TO ENTER FROM THE TOP OF THE ENCLOSURE.
9. LINE SIDE POWER CONNECTIONS TO LUGS: (1) #2/0 PER CONNECTION FOR 40KVA UPS. LOAD SIDE POWER CONNECTIONS TO BUS BARS, SEE DETAIL.

UPS-09

Edwards AND Kelcey
ONE NORTH FRANKLIN
CHICAGO, IL 60606
PHONE: (312) 251-3000
FAX: (312) 251-3015
WEB: WWW.EKCORP.COM

REVISIONS	
NAME	DATE

ILLINOIS DEPARTMENT OF TRANSPORTATION

F.A.I. 94/90 (DAN RYAN EXPRESSWAY)

31st STREET to I-57

OUTLINE DRAWING REMOTE
BATTERY BREAKER - 40 KVA
(NPOWER)

SCALE: NOT TO SCALE — DRAWN BY: JM

DATE: SEPTEMBER 23, 2005 — CHECKED BY: CS

p:\0300\0035\ts\cadd\contract 62947\ups020092a.slt
07/06/2005 11:13:15 AM