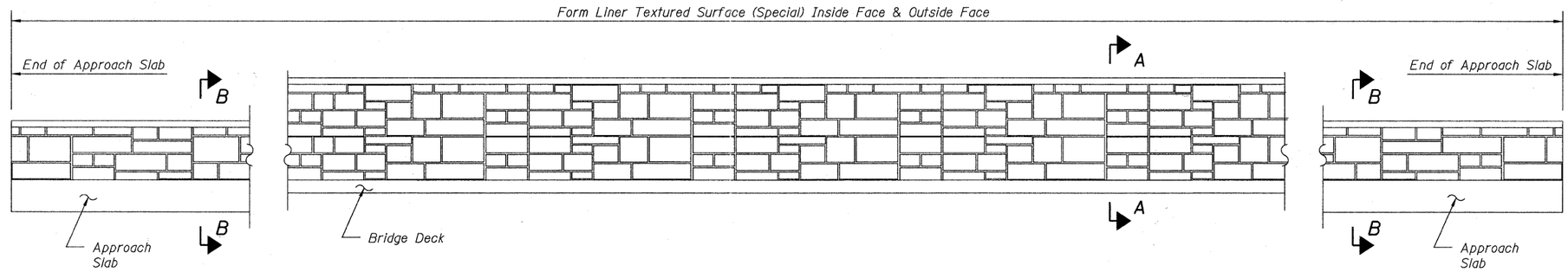

PARAPET ELEVATION

(Outside Face Shown, Typ. each Parapet)

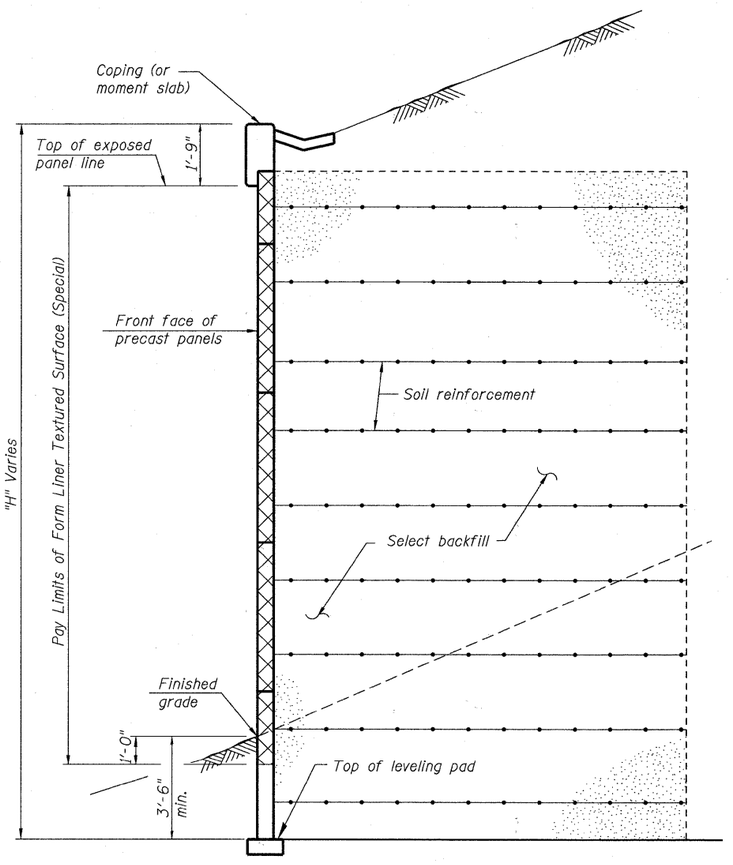

SECTION THRU MSE WALL

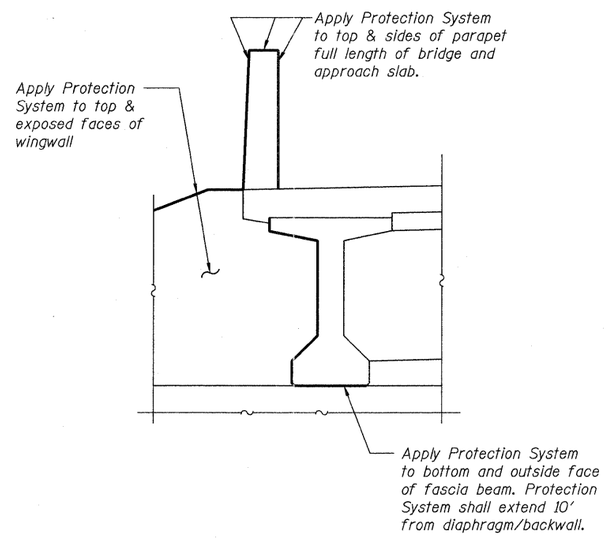

ANTI-GRAFITTI PROTECTION SYSTEM

Integrally Colored Concrete, paid for as Concrete Superstructure, Special

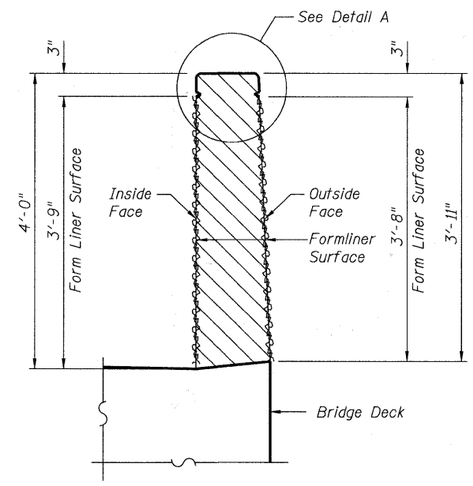

SECTION A-A

(Bridge Parapet Formliner)

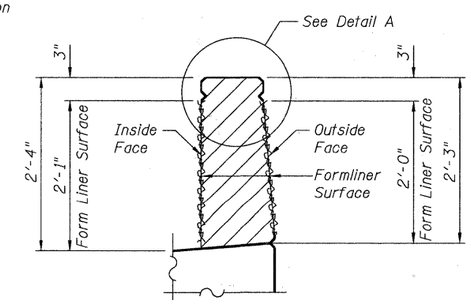

SECTION B-B

(Off-Bridge Parapet Formliner)

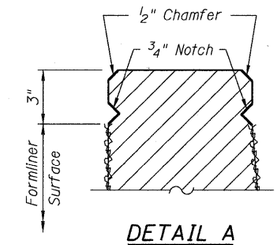

DETAIL A

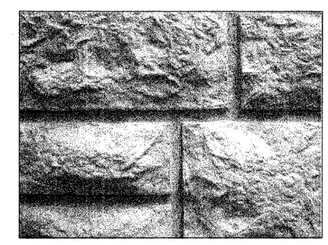

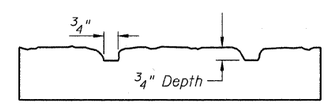

FORM LINER TEXTURE DETAIL

See Special Provisions

Note:

Form Liner Textured Surface (Special) to be used on inside and outside faces of Parapet & on front face of precast panels. Utilize Fitzgerald Formliners form liner pattern #17027 or equivalent.

The depth of relief of the Form Liner Textured Surface is limited to 3/4". The relief should not compromise the reinforcement clearance in the Parapet.

FILE NAME = w:\756-004_lombard - get bridges phase ii\cadd sheets\structure\UPRR\022312-023-Arch_Treatment.dgn

Bollinger, Lach & Associates, Inc. ITASCA, ILLINOIS	USER NAME = gonzalo	DESIGNED SRT	REVISED -	STATE OF ILLINOIS GREAT WESTERN TRAIL UNION PACIFIC RAILROAD	ARCHITECTURAL TREATMENT STRUCTURE NUMBER 022-3122	F.A. RTE.	SECTION	COUNTY	TOTAL SHEETS	SHEET NO.
		CHECKED JJI	REVISED -				06-00151-00-BR	DuPAGE	201	103
	PLOT SCALE =	DRAWN GM	REVISED -					CONTRACT NO. 63568		
	PLOT DATE = 7/26/2011	CHECKED JJI	REVISED -		SHEET NO. 23 OF 37 SHEETS			ILLINOIS FED. AID PROJECT		