TYPICAL SECTIONS

STA. 17+25 - 22+67
STA. 23+39 - 28+00
STA. 132+75 - 137+83
STA. 138+54 - 144+00
STA. 297+75 - 304+50
STA. 305+36 - 323+24
STA. 323+77 - 327+50
STA. 354+00 - 363+27
STA. 364+01 - 370+00
STA. 370+93 - 375+00

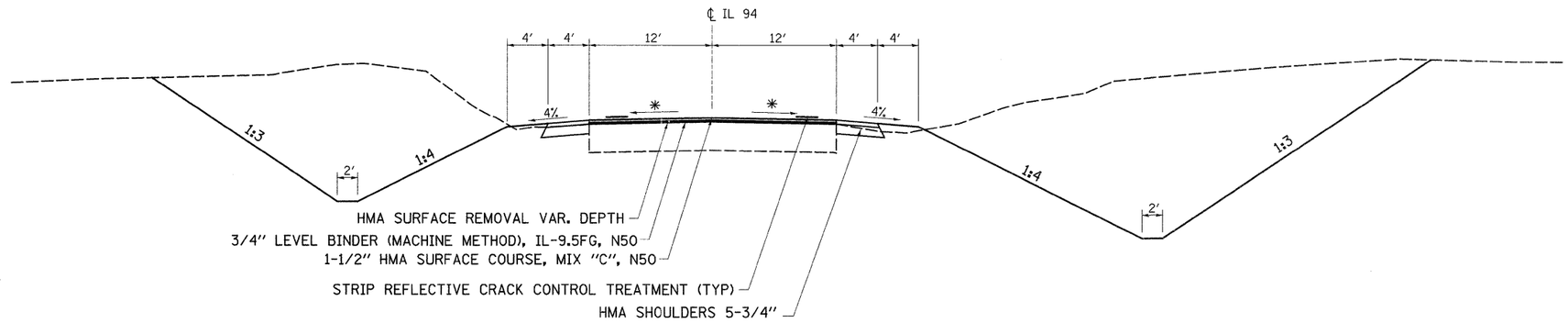

STA. 22+67 - 23+39
STA. 137+83 - 138+54
STA. 304+50 - 305+36
STA. 323+24 - 323+77
STA. 363+27 - 364+01
STA. 370+00 - 370+93

* MATCH EXISTING CROSS SLOPE, MIN 1/8″ PER FT.
112 LBS/SQ YD/IN

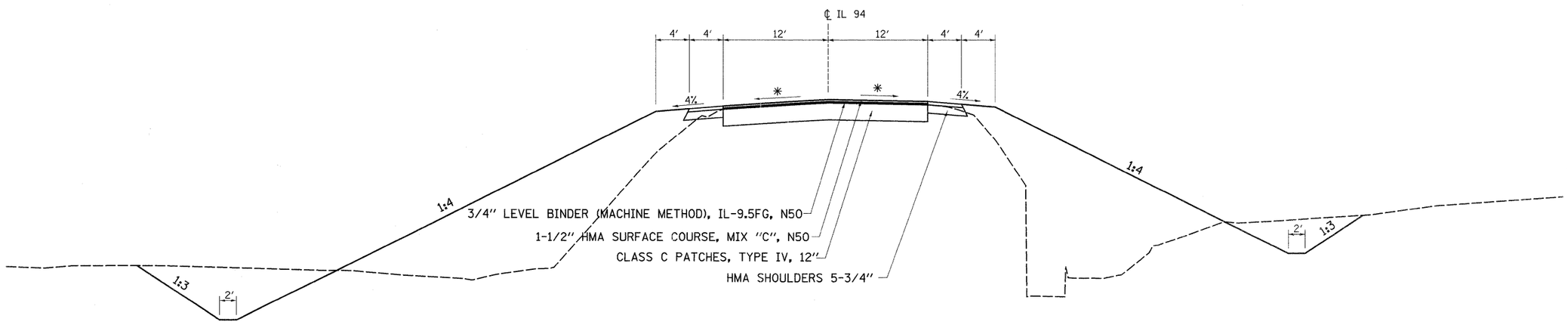

* 221,213 & 220
** ROCK ISLAND & MERCER COUNTY

FILE NAME = c:\pw_work\pwidot\grantpm\d0184077\D212007-sht-typical.dgn	USER NAME = grantpm	DESIGNED -	REVISED -
		DRAWN -	REVISED -
	PLOT SCALE = 50.0000 ′ / in.	CHECKED -	REVISED -
	PLOT DATE = Thu Jun 23 08:32:57 2011	DATE -	REVISED -

STATE OF ILLINOIS
DEPARTMENT OF TRANSPORTATION

TYPICAL SECTIONS

SCALE: | SHEET NO. OF SHEETS | STA. TO STA.

F.A.S. RTE.	SECTION	COUNTY	TOTAL SHEETS	SHEET NO.
*	(19,20)RS-2	**	231	9

CONTRACT NO. 64D72

ILLINOIS FED. AID PROJECT