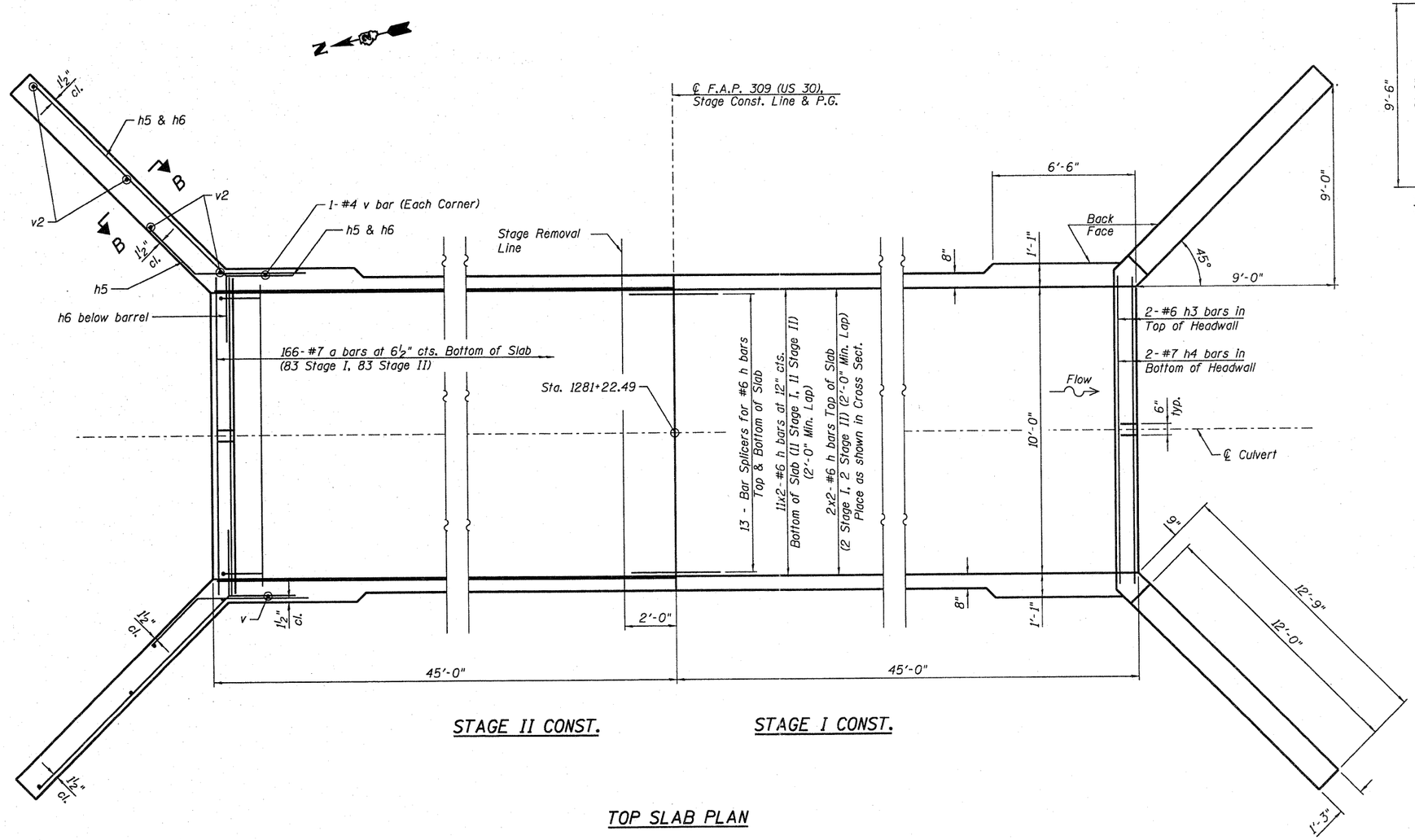

TOP SLAB PLAN

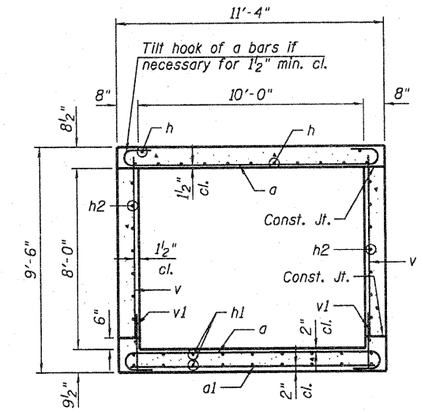

SECTION THRU BARREL

BILL OF MATERIAL

Bar	No.	Size	Length	Shape
a	332	#7	12'-8"	
a1	48	#4	10'-5"	
d	22	#4	4'-6"	
h	52	#6	23'-4"	
h1	72	#5	23'-4"	
h2	64	#6	23'-4"	
h3	4	#6	11'-4"	
h4	4	#7	11'-10"	
h5	52	#8	8'-0"	
h6	44	#8	15'-8"	
v	364	#4	8'-0"	
v1	360	#4	2'-3"	
v2	16	#4	12'-0"	
Concrete Box Culverts			Cu. Yd.	121.1
Reinforcement Bars			Pound	20,540

NOTES

1. A distance of half the length of the wingwall but not less than six feet of the barrel shall be poured monolithically with the wingwalls.

2. Bars indicated thus 11 x 2-#6 etc. indicates 11 lines of bars with 2 lengths per line.

FILE NAME = P:\CBBEL WEST Projects\2009\124100 IDOT Various Various\Structural\Dgn\Work Order #12 IL 38 Culverts\SN 098-1067\098I067-64F23-B085-TopSlab.dgn

WILLS BURKE KELSEY ASSOCIATES LTD.
116 West Main Street, Suite 201
St. Charles, Illinois 60174
(630) 443-7755

USER NAME =	DESIGNED - DLS	REVISED -	
FILE NAME =	CHECKED - AEU	REVISED -	
PLOT SCALE =	DRAWN - AWH	REVISED -	
PLOT DATE = 06/24/2011	CHECKED - DLS	REVISED -	

STATE OF ILLINOIS
DEPARTMENT OF TRANSPORTATION

CULVERT TOP SLAB PLAN
STRUCTURE NO. 098-1067

SHEET NO. 5 OF 9 SHEETS

F.A.P. RTE.	SECTION	COUNTY	TOTAL SHEETS	SHEET NO.
309	15T-1	WHITESIDE	74	37
		CONTRACT NO. 64F23		
		ILLINOIS FED. AID PROJECT		