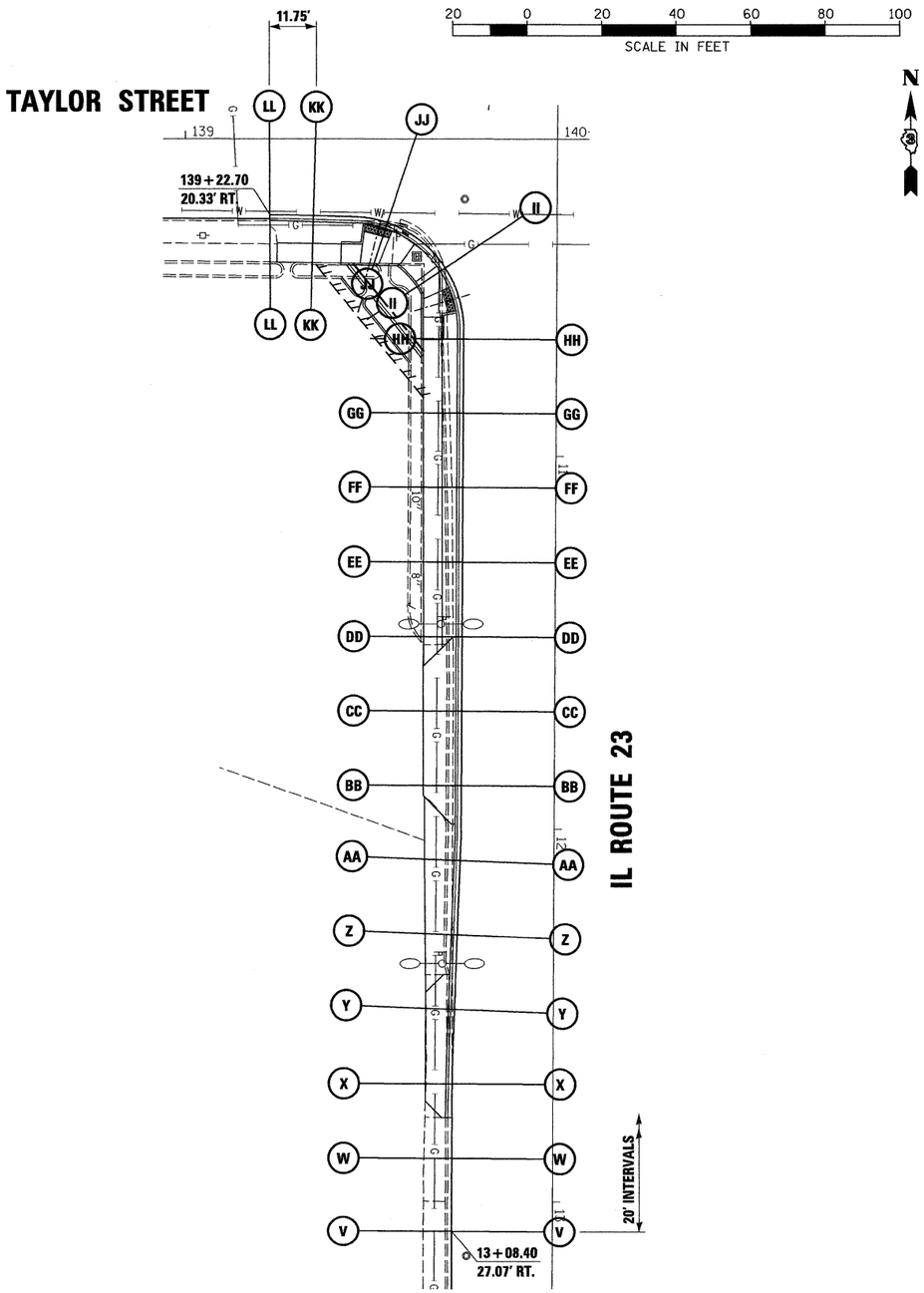

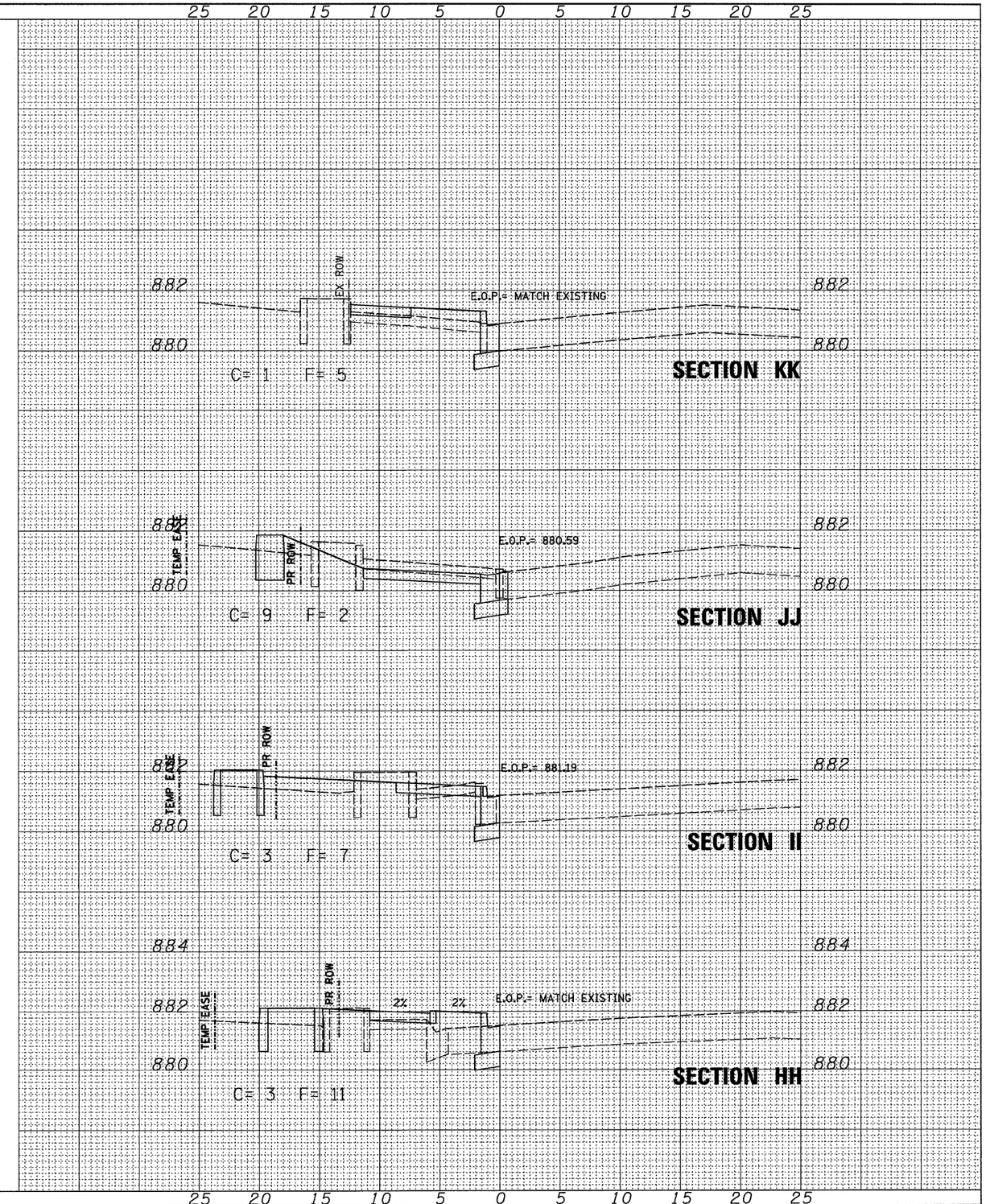

FINAL SURVEY	
SURVEYED	
PLOTTED	
TEMPLATE	
AREAS	
AREAS CHECKED	
NOTE BOOK NO.	

ORIGINAL SURVEY		
SURVEYED	CHAMLIN & ASSOCIATES	07/09
PLOTTED	LAG	09/09
TEMPLATE		
AREAS		
AREAS CHECKED		
NOTE BOOK NO.		

FILE NAME = D366983-SHT-XSSHT-TAYLOR-SW.DGN	USER NAME = ___	DESIGNED - DJD	REVISED - ___ _____
		DRAWN - LAG	REVISED - ___ _____
	PLOT SCALE = 1"=20'	CHECKED - DJD	REVISED - ___ _____
	PLOT DATE = 01/11	DATE - 01/11	REVISED - ___ _____

STATE OF ILLINOIS
DEPARTMENT OF TRANSPORTATION

CROSS SECTIONS (TAYLOR STREET) SW

SCALE: 1"=20' | SHEET NO. __ OF ___ SHEETS | STA. _____ TO STA. _____

F.A.P. RTE.	SECTION	COUNTY	TOTAL SHEETS	SHEET NO.
68	(28)N, TS & I	DEKALB	120	117
		CONTRACT NO. 66983		
		ILLINOIS FED. AID PROJECT		