DETAIL OF PRECAST CONCRETE BOX CULVERT SECTION

(WITH LESS THAN 2 FEET OF COVER
AASHTO DESIGNATION M273)
DESIGN LOADING: HS-20-44

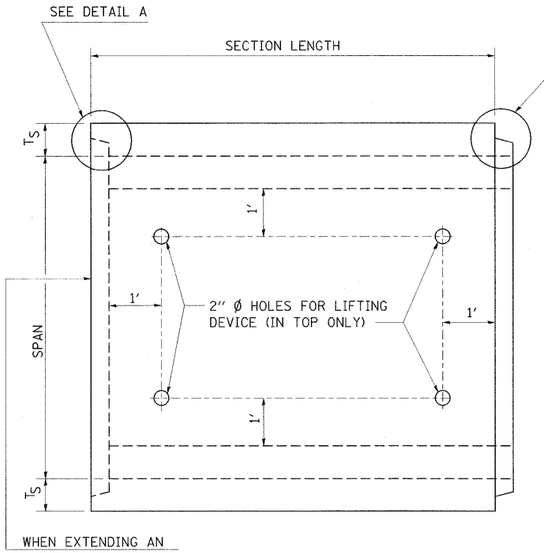

PLAN

LOCATION OF LIFTING HOLES MAY BE VARIED AS NEEDED TO CLEAR REINFORCEMENT.

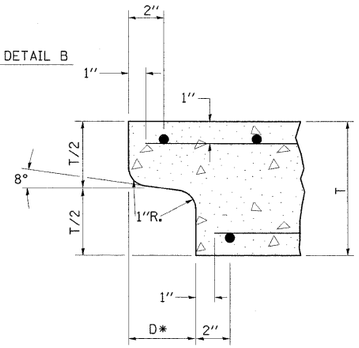

DETAIL A

(TYP. INLET END)

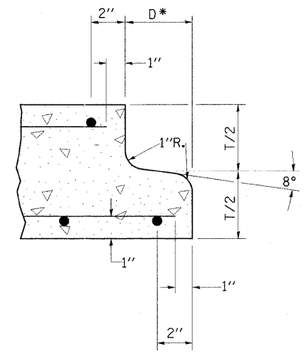

DETAIL B

(TYP. OUTLET END)

NOTE: INLET AND OUTLET ENDS SHALL BE COMPATIBLE.
* THE D DIMENSION SHALL CONFORM TO THE MANUFACTURER'S STANDARDS.

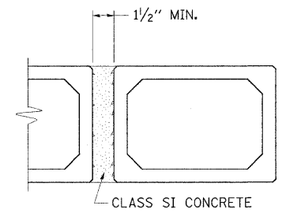

MULTIPLE UNIT PLACEMENT

GENERAL NOTES

SHOP PLANS FOR THE REINFORCEMENT SHALL BE SUBMITTED IN ACCORDANCE WITH THE REQUIREMENTS OF ARTICLE 504.04 OF THE STANDARD SPECIFICATIONS.

MINIMUM CONCRETE STRENGTH SHALL BE 5000 PSI AFTER 28 DAYS.

THE JOINTS OF THE PRECAST BOX SECTIONS SHALL BE SEALED WITH MASTIC IN ACCORDANCE WITH ARTICLE 1055.01 OF THE STANDARD SPECIFICATIONS FOR ROAD AND BRIDGE CONSTRUCTION.

LIFTING HOLES SHALL BE FILLED WITH CONCRETE PLUGS AND MASTIC AFTER THE BOX SECTIONS ARE IN PLACE.

THE TERMS AS1, AS2, ETC. DENOTE THE REQUIRED STEEL AREAS FOR REINFORCEMENT AS SPECIFIED IN AASHTO M273.

REINFORCEMENT SHALL BE WELDED WIRE FABRIC CONFORMING TO ASTM SPECIFICATIONS A 185 OR A 497. LONGITUDINAL DISTRIBUTION REINFORCEMENT MAY CONSIST OF WELDED WIRE FABRIC OR DEFORMED BILLET-STEEL BARS CONFORMING TO AASHTO M-31, M-42, GRADE 60.

DRAINAGE OPENINGS SHALL BE PROVIDED IN ACCORDANCE WITH ARTICLE 503.11 OF THE STANDARD SPECIFICATIONS. LOCATION AND SPACING OF THE OPENINGS SHALL BE SHOWN ON THE SHOP DRAWINGS.

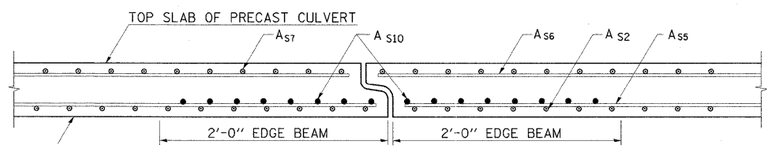

DETAIL OF EDGE BEAM

NOTE: THE A_{S10} REINFORCEMENT SHALL BE THE SAME LENGTH AS THE A_{S2}.

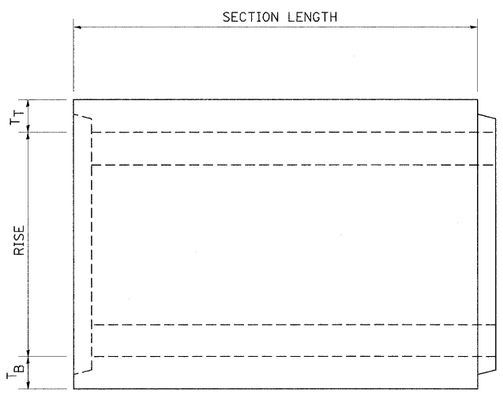

ELEVATION

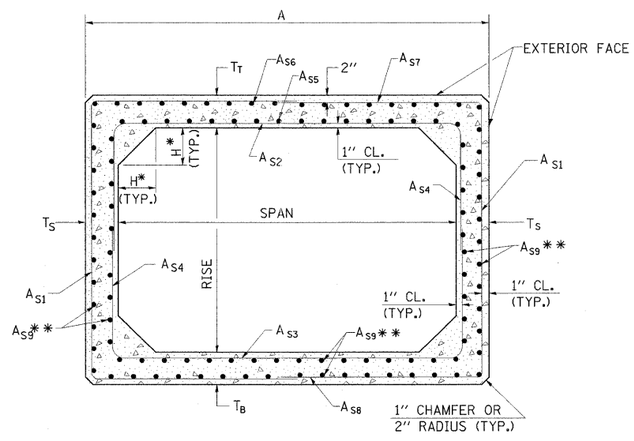

CROSS SECTION

* THE HAUNCH DIMENSION, H, IS EQUAL TO THE WALL THICKNESS, T_S.
** THE AREA OF A_{S9} REINFORCEMENT SHALL BE BE A MINUMUM OF 0.12 SQ. IN./FT.

DIMENSIONS & EDGE BEAM REINFORCEMENT

SPAN X RISE	DIMENSIONS (INCHES) T_T	T_B	T_S	EDGE BEAM REINF. AREA (IN.²/FT.) A_{S10}
3' X 2'	7	6	4	0.42
3' X 3'	7	6	4	0.42
4' X 2'	7½	6	5	0.59
4' X 3'	7½	6	5	0.59
4' X 4'	7½	6	5	0.59
5' X 3'	8	7	6	0.59
5' X 4'	8	7	6	0.59
5' X 5'	8	7	6	0.59
6' X 3'	8	7	7	0.73
6' X 4'	8	7	7	0.73
6' X 5'	8	7	7	0.73
6' X 6'	8	7	7	0.73
7' X 4'	8	8	8	0.85
7' X 5'	8	8	8	0.85
7' X 6'	8	8	8	0.85
7' X 7'	8	8	8	0.85
8' X 4'	8	8	8	1.00
8' X 5'	8	8	8	1.00
8' X 6'	8	8	8	1.00
8' X 7'	8	8	8	1.00
8' X 8'	8	8	8	1.00

SPAN X RISE	DIMENSIONS (INCHES) T_T	T_B	T_S	EDGE BEAM REINF. AREA (IN.²/FT.) A_{S10}
9' X 5'	9	9	9	1.00
9' X 6'	9	9	9	1.00
9' X 7'	9	9	9	1.00
9' X 8'	9	9	9	1.00
9' X 9'	9	9	9	1.00
10' X 5'	10	10	10	0.89
10' X 6'	10	10	10	0.89
10' X 7'	10	10	10	0.89
10' X 8'	10	10	10	0.89
10' X 9'	10	10	10	0.89
10' X 10'	10	10	10	0.89
11' X 4'	11	11	11	0.89
11' X 6'	11	11	11	0.89
11' X 8'	11	11	11	0.89
11' X 10'	11	11	11	0.89
11' X 11'	11	11	11	0.89
12' X 4'	12	12	12	0.89
12' X 6'	12	12	12	0.89
12' X 8'	12	12	12	0.89
12' X 10'	12	12	12	0.89
12' X 12'	12	12	12	0.89

STD. 9-49

REVISIONS

DRAWN	9-8-89	REVISED	12-17-01
REVISED	3-27-90	REVISED	01-10-07
REVISED	3-11-92	REVISED	5-7-08
REVISED	8-16-94		

FILE NAME = I:\IDOT\09006603\Draw\CADD_Sheets\Frontage Road Contract\D998859-sht-details.dgn	USER NAME = Gary Davis	DESIGNED - BMB	REVISED -
		DRAWN - RAH	REVISED -
	PLOT SCALE = 50.0000 ' / IN.	CHECKED - SPH	REVISED -
	PLOT DATE = 3/16/2011	DATE - 3/16/11	REVISED -

STATE OF ILLINOIS
DEPARTMENT OF TRANSPORTATION

PROJECT DETAILS
ILLINOIS ROUTE 13

SCALE: N/A | SHEET NO. OF SHEETS | STA. TO STA.

F.A. RTE.	SECTION	COUNTY	TOTAL SHEETS	SHEET NO.
331	(1X-1) R-7	WILLIAMSON	79	48

CONTRACT NO. 78251

ILLINOIS FED. AID PROJECT