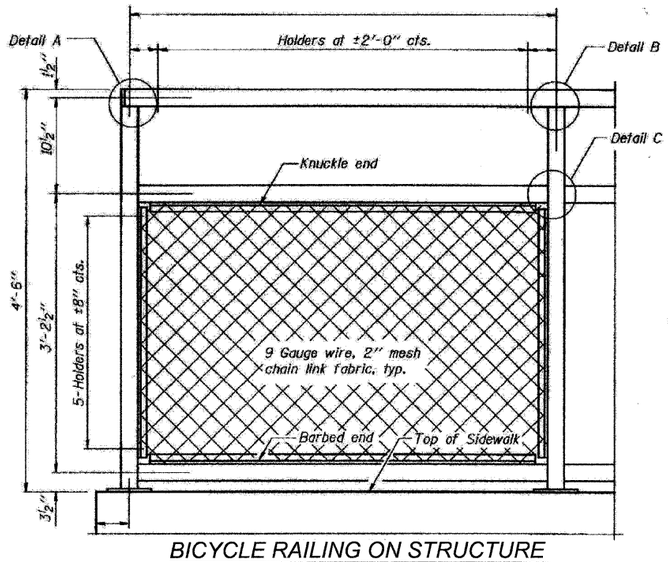

BICYCLE RAILING ON STRUCTURE

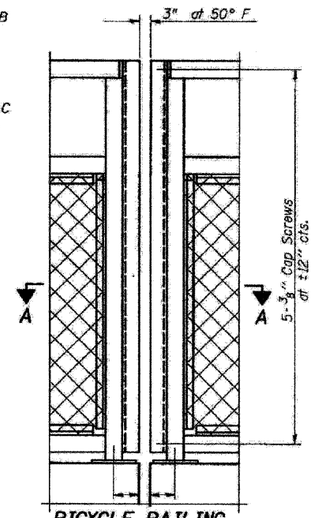

BICYCLE RAILING

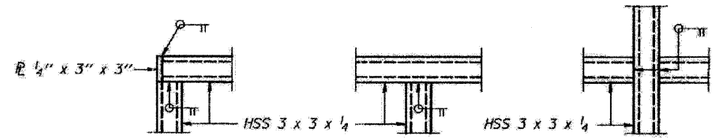

DETAIL A DETAIL B DETAIL C

NOTES:

1. All steel rail elements shall be galvanized according to Article 509.05 of the Standard Specifications.
2. All steel rail elements shall meet grade requirements according to Article 1006.34 of the Standard Specifications.

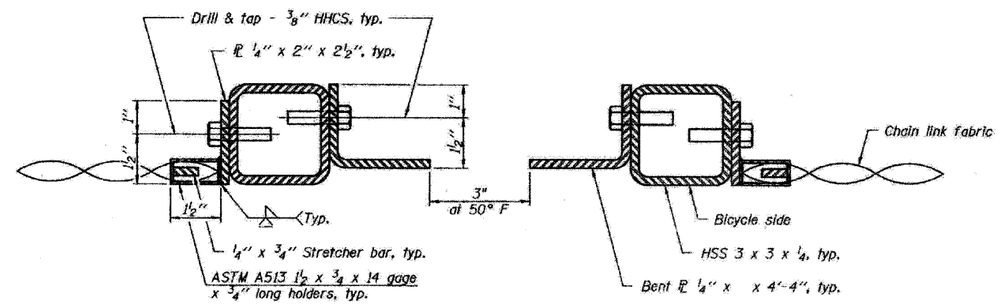

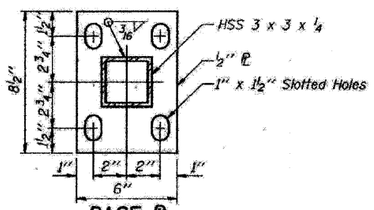

BASE PL

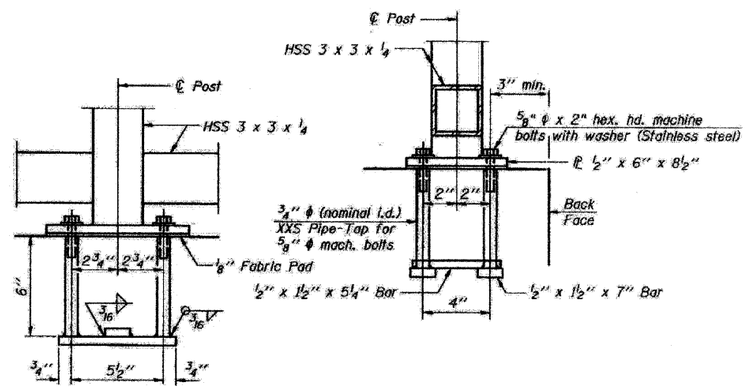

ANCHOR BOLT DETAILS

In lieu of the cast-in-place anchor device shown, the Contractor has the option of drilling and setting ⅝" ϕ anchor rods according to Article 509.06 of the Standard Specifications. Embedment shall be according to the manufacturer's specifications.

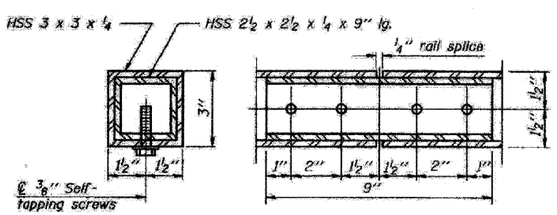

RAIL SPLICE

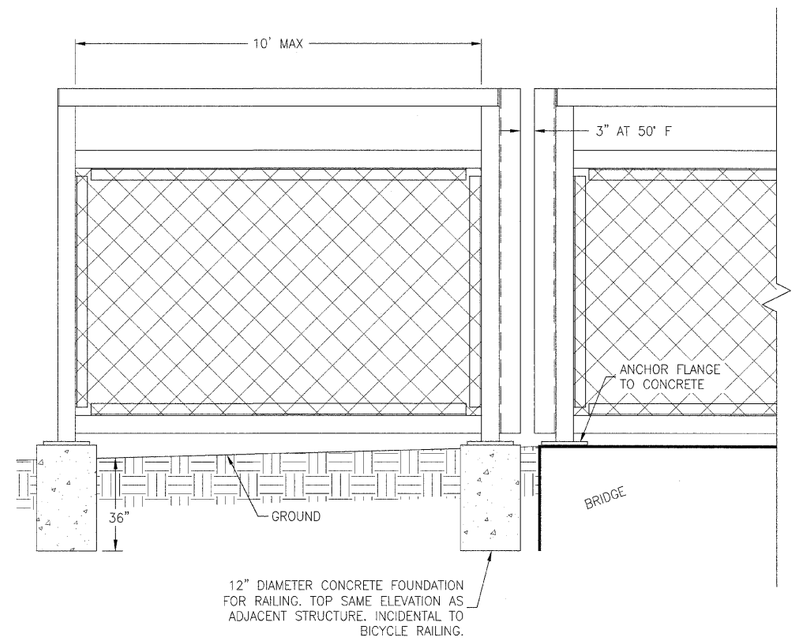

BICYCLE RAILING OFF STRUCTURE

F.A.U. RTE.	SECTION	COUNTY	TOTAL SHEETS	SHEET NO.
N/A	**	KANKAKEE	21	15

CONTRACT NO. 87397

FED. ROAD DIST. NO.	ILLINOIS	FED. AID PROJECT

** 08-00058-00-BT

TYSON ENGINEERING, INC.
CONSULTING CIVIL ENGINEERS AND SURVEYORS
DESIGN FIRM LICENSE #184-001136
367 SOUTH SCHUYLER AVENUE
KANKAKEE, ILLINOIS 60901
PHONE (815) 932-7406

This document and the ideas and designs incorporated herein, as an instrument of professional service, is the property of Tyson Engineering Inc. and is not to be used in whole or in part, for any other project without written authorization of Tyson Engineering Inc.

Do not scale drawings. Use dimensions only.

Contractor shall be responsible for verifying all dimensions.

Information hereon and herein is confidential.

REVISIONS

NO.	DATE	BY	DESCRIPTION

RAILING DETAILS

PROJECT:
GREENWAYS TRAIL
MANTENO, ILLINOIS

SECTION 08-00058-00-BT

DATE: 7/15/11	JOB NO. E08110
SCALE: N/A	FILE NO.
DRAWN BY: MRG	SHEET 15
CHECKED BY: SRM	