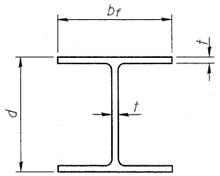

STEEL PILE TABLE

Designation	Depth d	Flange width b_f	Web and Flange thickness t	Encasement diameter A
HP 12x53	$11\frac{3}{4}''$	12''	$\frac{7}{16}''$	24''

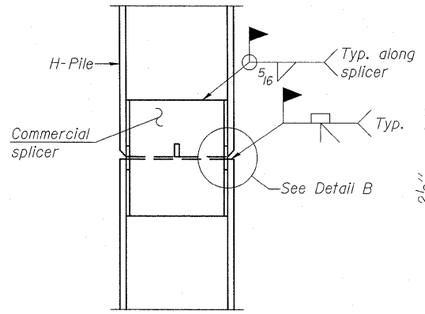

ELEVATION

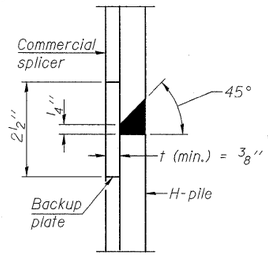

DETAIL "B"

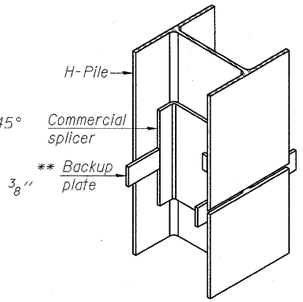

ISOMETRIC VIEW

WELDED COMMERCIAL SPLICE

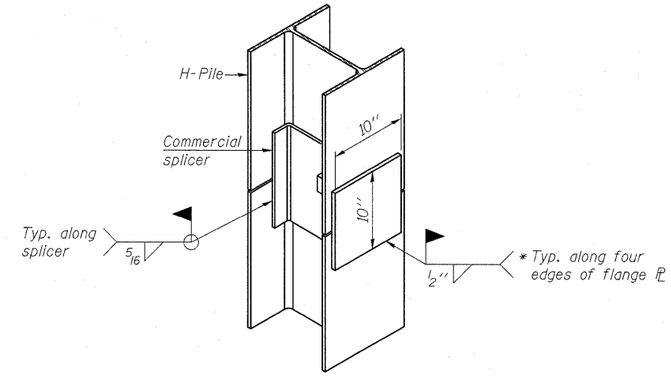

ISOMETRIC VIEW

WELDED COMMERCIAL SPLICE ALTERNATE

* Interrupt welds $\frac{1}{4}''$ from end of web and/or each flange.

** Remove portions of backup plates that extend outside the flanges.

*** Weld size per pile shoe manufacturer ($\frac{5}{16}''$ min.).

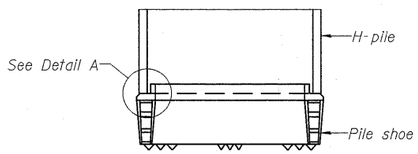

ELEVATION

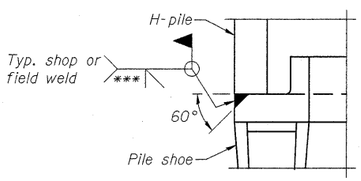

DETAIL A

H-PILE SHOE ATTACHMENT

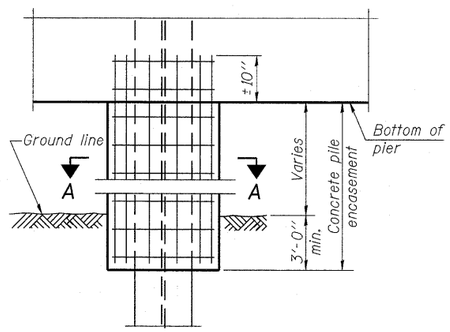

ELEVATION AT PIERS

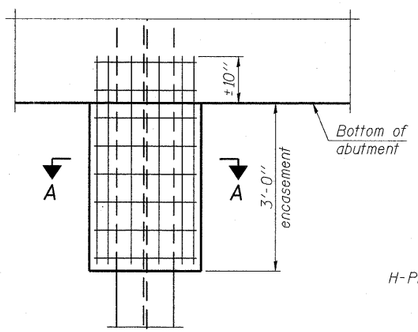

ELEVATION AT ABUTMENTS

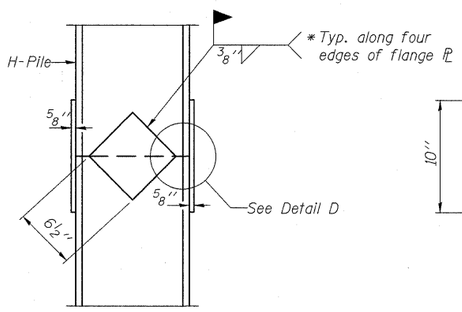

ELEVATION

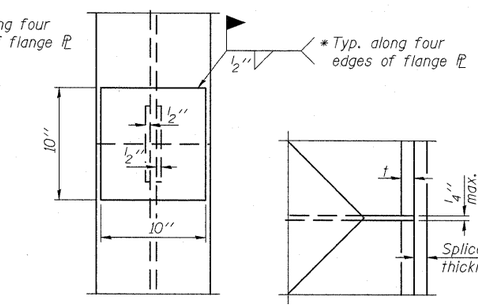

END VIEW

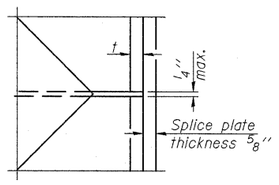

DETAIL D

WELDED PLATE FIELD SPLICE

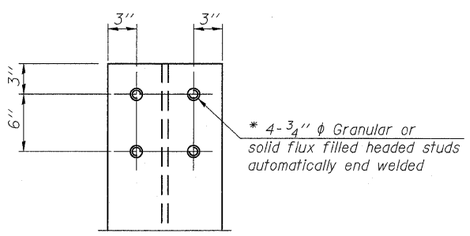

SEISMIC PILE ANCHORAGE

* Typical each flange, each pile.
Cost included with Furnishing Piles.

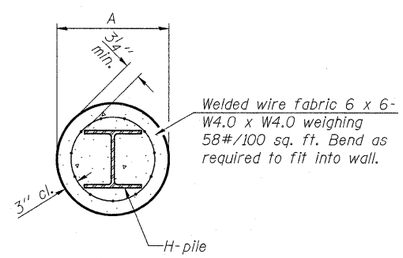

Note:
Forms for encasement may be omitted when soil conditions permit.

SECTION A-A

PILE ENCASEMENT

Note:
The steel H-piles shall be according to AASHTO M270 Grade 50.

FILE NAME = 53173-bridge sheets.dgn	DESIGNED - K. HEFFERN	REVISED -	STATE OF ILLINOIS DEPARTMENT OF TRANSPORTATION
	DRAWN - C. BECKER	REVISED -	
	CHECKED - C. EPPERLY	REVISED -	
	DATE - NOVEMBER 2010	REVISED -	

HP PILE DETAILS
STRUCTURE NO. 082-4158

SCALE: N/A | SHEET NO. 14 OF 16 SHEETS | STA. 34+16.75 TO STA. 35+27.25

F.A. RTE.	SECTION	COUNTY	TOTAL SHEETS	SHEET NO.
	08-18101-04-BR	ST. CLAIR	16	14
PROJECT BROS-163(32)		CONTRACT NO. 97466		
ILLINOIS FED. AID PROJECT				